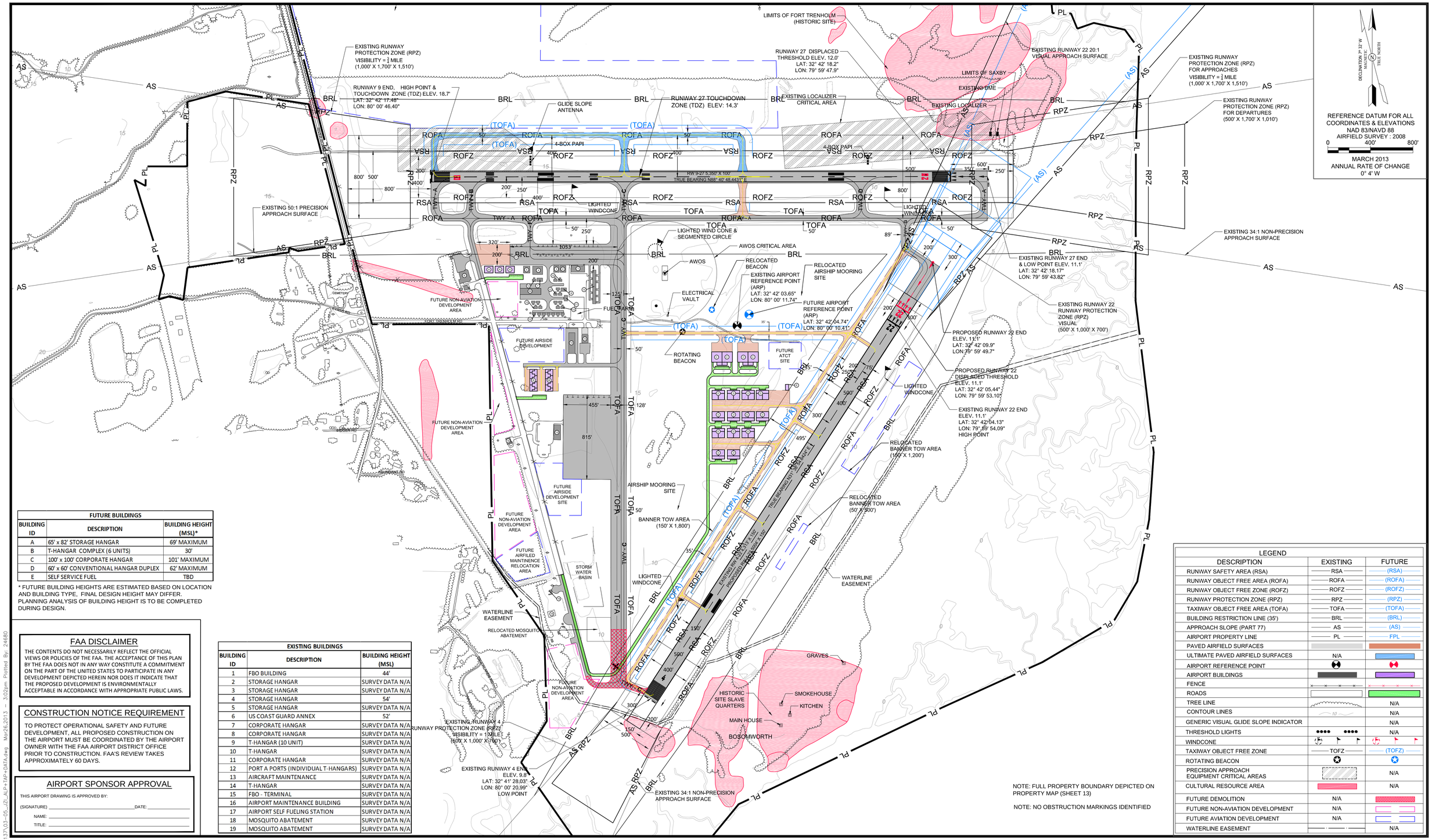

G:\pw_work\projpw\124680\dms28137\03-05_ZL_ALP-TAP-DATA.dwg Mar26,2013 3:02pm Plotted By: 24680

REVISIONS	
DATE	DESCRIPTION

CLIENT

PROJECT

CHARLESTON EXECUTIVE AIRPORT
CHARLESTON, SOUTH CAROLINA
AIRPORT LAYOUT PLAN

SHEET TITLE

DRAFT

AIRPORT LAYOUT PLAN

ATKINS
482 South Keller Road | Tel. (407) 647-7275
Orlando, Florida 32810 | Fax (407) 806-4500
www.atkinsglobal.com/northamerica

JOB NO.: 063028502
DRAWN: AMM
DESIGN: AMM
CHECKED: JDH
DATE: MARCH 2012

RUNWAY DATA

RUNWAY DATA		RUNWAY 9/FUTURE RUNWAY 10		RUNWAY 27/ FUTURE RUNWAY 28	
		EXISTING	ULTIMATE	EXISTING	ULTIMATE
EFFECTIVE GRADIENT		0.14%	SAME	0.14%	SAME
% WIND COVERAGE	10.5 KNOTS	90.65%	SAME	90.65	SAME
	13.0 KNOTS	94.89%	SAME	94.89	SAME
	16.0 KNOTS	98.83%	SAME	98.83	SAME
MAXIMUM ELEVATION (MSL.)		18.7'	SAME	18.7'	SAME
RUNWAY LENGTH		5,350'	SAME	5,350'	SAME
RUNWAY WIDTH		100'	SAME	100'	SAME
DISPLACED THRESHOLD		NONE	SAME	350'	SAME
SURFACE TYPE		CONCRETE	SAME	CONCRETE	SAME
PAVEMENT STRENGTH (LBS.)	SINGLE WHEEL	60,000	SAME	60,000	SAME
	DUAL WHEEL	100,000	SAME	100,000	SAME
PART 77 APPROACH SURFACE SLOPE		50:1	SAME	34:1	SAME
APPROACH VISIBILITY MINIMUMS		3/4 MILE	SAME	3/4 MILE	SAME
VISUAL APPROACH AIDS		PAPI 4-L	SAME	PAPI 4-R	SAME
INSTRUMENT APPROACH AIDS		ILS, DME, GPS	SAME	GPS	SAME
RUNWAY LIGHTING		HIRL	SAME	HIRL	SAME
TAXIWAY LIGHTING		MITL	SAME	MITL	SAME
RUNWAY MARKING		PIR	SAME	NPI	SAME
AIRPORT REFERENCE CODE		D-III	SAME	D-III	SAME
CRITICAL AIRCRAFT		GULFSTREAM V	SAME	GULFSTREAM V	SAME
RUNWAY OBJECT FREE AREA	BEYOND RUNWAY	800*	1,000'	600*	1,000'
	WIDTH	800	SAME	800	SAME
RUNWAY SAFETY AREA	BEYOND RUNWAY	800*	SAME	600*	SAME
	WIDTH	500	SAME	500	SAME
FAR PART 77 CATEGORY		PIR	SAME	D(NP)	SAME
RUNWAY END COORDINATES (NAD 1983)		LAT: 32°42'17.5" LONG: 80°00'46.4"	SAME	LAT: 32°41'18.2" LONG: 79°59'43.7"	SAME
RUNWAY END ELEVATIONS (MSL)		18.7'	SAME	11.1'	SAME
DISPLACED THRESHOLD ELEVATION (MSL)		N/A	N/A	12.0'	SAME
TDZ ELEVATION (MSL)		18.7'	SAME	14.19'	SAME
RUNWAY TRUE BEARING		N88°40'48.4431"E	SAME	N268°40'48.4431"E	SAME

RUNWAY DATA

RUNWAY DATA		RUNWAY 4		RUNWAY 22	
		EXISTING	FUTURE	EXISTING	FUTURE
EFFECTIVE GRADIENT		0.02%	0.03%	0.02%	0.03%
% WIND COVERAGE	10.5 KNOTS	94.28%	SAME	94.28%	SAME
	13.0 KNOTS	97.18%	SAME	97.18%	SAME
	16.0 KNOTS	99.40%	SAME	99.40%	SAME
MAXIMUM ELEVATION (MSL.)		11.1'	SAME	11.1'	SAME
RUNWAY LENGTH		4,313'	5,004'	4,313'	5,004'
RUNWAY WIDTH		150'	SAME	150'	SAME
DISPLACED THRESHOLD		NONE	SAME	NONE	530'
SURFACE TYPE		CONCRETE	SAME	CONCRETE	SAME
PAVEMENT STRENGTH (LBS.)	SINGLE WHEEL	45,000	SAME	45,000	SAME
	DOUBLE WHEEL	56,000	SAME	56,000	SAME
PART 77 APPROACH SURFACE SLOPE		34:1	SAME	20:1	SAME
APPROACH VISIBILITY MINIMUMS		1 MILE	SAME	VFR	SAME
VISUAL APPROACH AIDS		NONE	SAME	NONE	SAME
INSTRUMENT APPROACH AIDS		GPS	SAME	NONE	SAME
RUNWAY LIGHTING		MIRL	SAME	MIRL	SAME
TAXIWAY LIGHTING		MITL	SAME	MITL	SAME
RUNWAY MARKING		NPI	SAME	VISUAL	SAME
AIRPORT REFERENCE CODE		B-II	SAME	B-II	SAME
CRITICAL AIRCRAFT		CITATION III	SAME	CITATION III	SAME
RUNWAY OBJECT FREE AREA	BEYOND RUNWAY	300	SAME	300	SAME
	WIDTH	500	SAME	500	SAME
RUNWAY SAFETY AREA	BEYOND RUNWAY	300	SAME	300	SAME
	WIDTH	150	SAME	150	SAME
FAR PART 77 CATEGORY		C(NP)	SAME	B(V)	SAME
RUNWAY END COORDINATES (NAD 1983)		LAT: 32°41'28.0" LONG: 80°00'20.9"	SAME	LAT: 32°42'04.1" LONG: 79°59'54.1"	LAT: 32°42'09.9" LONG: 79°59'49.7"
RUNWAY END ELEVATIONS (MSL)		9.8'	SAME	11.1'	11.1'
DISPLACED THRESHOLD ELEVATION (MSL)		N/A	SAME	N/A	11.1'
TDZ ELEVATION (MSL)		11.1'	SAME	N/A	N/A
RUNWAY BEARING		N31°38'54.6424"E	SAME	N31°38'54.6424"E	SAME

AIRPORT DATA

AIRPORT DATA		EXISTING	FUTURE
AIRPORT ELEVATION (MSL)		18.6'	18.6'
AIRPORT REFERENCE POINT	(NAD 1983)		
	LATITUDE	32° 42' 03.66"	32° 42' 04.74"
	LONGITUDE	80° 00' 11.74"	80° 00' 10.41"
MEAN MAX. TEMP OF HOTTEST MONTH		88°	88°
AIRPORT TERMINAL NAVAIDS		CAT-I ILS, DME, GPS, BEACON	CAT-I ILS, DME, GPS, BEACON
AIRPORT REFERENCE CODE / RUNWAY		D-III / RWY 9-27	D-III / RWY 9-27
		B-II/RWY 4-22	B-II/RWY 4-22
DESIGN AIRCRAFT	RWY 9-27	GULFSTREAM V	GULFSTREAM V
	RWY 4-22	CITATION III	CITATION III
NPIAS SERVICE LEVEL		GENERAL AVIATION	GENERAL AVIATION
ASSET CATEGORY		REGIONAL	REIGONAL

DECLARED DISTANCES

RUNWAY	PROPOSED				FUTURE			
	TORA	TODA	ASDA	LDA	TORA	TODA	ASDA	LDA
RUNWAY 9	5350'	5350'	4600'	4600'	5350'	5350'	4600'	4600'
RUNWAY 27	5350'	5350'	5150'	4800'	5350'	5350'	5150'	4800'
RUNWAY 4	4313'	4313'	4313'	4313'	5004'	5004'	5004'	5004'
RUNWAY 22	4313'	4313'	4313'	4313'	5004'	5004'	5004'	4474'

RUNWAY PROTECTION ZONE (RPZ) DIMENSIONS

APPROACH RUNWAY END	EXISTING	PROPOSED
RUNWAY 9	1700'L x 1000'IW x 1510'OW	SAME
RUNWAY 27 APPROACH	1700'L x 1000'IW x 1510'OW	SAME
RUNWAY 27 DEPARTURE	1700'L x 500'IW x 1010OW	SAME
RUNWAY 4	1000'L x 500'IW x 700'OW	SAME
RUNWAY 22 APPROACH	1000'L x 500'IW x 700'OW'	SAME
RUNWAY 22 DEPARTURE	1000'L x 500'IW x 700'OW'	SAME

RUNWAY SAFTEY AREA (RSA) DIMENSIONS

RUNWAY END	EXISTING	PROPOSED
RUNWAY 9	500'W x 800' BEYOND RUNWAY END *	500'W x 1000' BEYOND ASDA + LDA
RUNWAY 27	500'W x 600' BEYOND RUNWAY END *	500'W x 1000' BEYOND RUNWAY ASDA + LDA
RUNWAY 4	150'W x 300' BEYOND RUNWAY END	150'W x 300' BEYOND RUNWAY END
RUNWAY 22	150'W x 300' BEYOND RUNWAY END	150'W x 300' BEYOND RUNWAY END

* FAA STANDARD ROFA/RSA LENGTH BEYOND RUNWAY END FOR ARC D-III IS 1,000'. THE AIRPORT HAS CONDUCTED AN RSA DETERMINATION STUDY. THIS DEFICIENCY WILL REQUIRE IMPLEMENTATION OF DECLARED DISTANCES

ALL WEATHER WIND ROSE

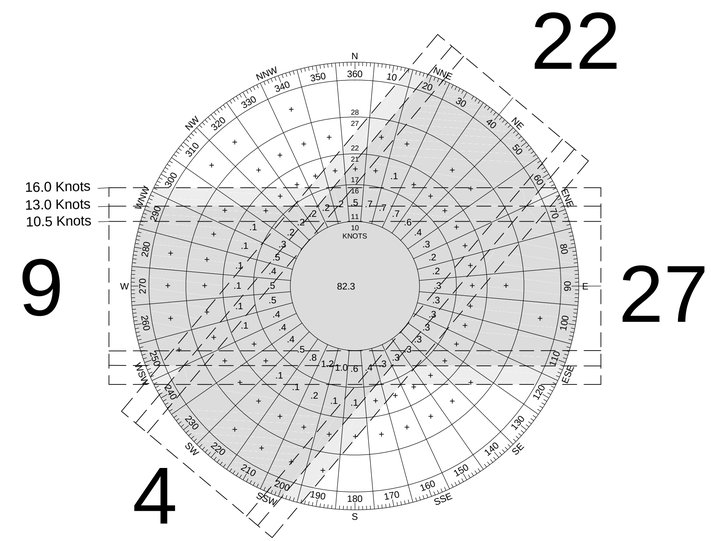

IFR WEATHER WIND ROSE

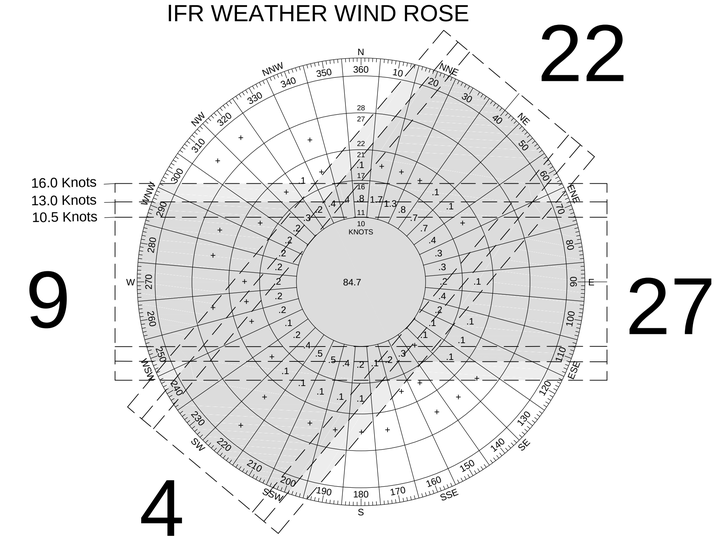

ALL WEATHER

CROSS WIND COMPONENT	9-27	4-22	COMBINED
10.5 Knots / 12 MPH	90.65%	94.28%	97.88%
13.0 Knots / 15 MPH	94.89%	97.18%	99.33%
16.0 Knots / 18.5 MPH	98.83%	99.40%	99.86%

IFR WEATHER

CROSS WIND COMPONENT	9-27	4-22	COMBINED
10.5 Knots / 12 MPH	90.68%	95.65%	97.85%
13.0 Knots / 15 MPH	94.81%	97.67%	99.15%
16.0 Knots / 18.5 MPH	98.78%	99.17%	99.68%

Station: Charleston International Airport, Charleston, South Carolina
Source: National Climatic Data Center/National Oceanic and Atmospheric Administration
Period of Observation: 2000 - 2009
All Weather Observations: 83,171
IFR Weather Observations: 4,231 (5.09% of the time)

FAA DISCLAIMER

THE CONTENTS DO NOT NECESSARILY REFLECT THE OFFICIAL VIEWS OR POLICIES OF THE FAA. THE ACCEPTANCE OF THIS PLAN BY THE FAA DOES NOT IN ANY WAY CONSTITUTE A COMMITMENT ON THE PART OF THE UNITED STATES TO PARTICIPATE IN ANY DEVELOPMENT DEPICTED HEREIN NOR DOES IT INDICATE THAT THE PROPOSED DEVELOPMENT IS ENVIRONMENTALLY ACCEPTABLE IN ACCORDANCE WITH APPROPRIATE PUBLIC LAWS.

REVISIONS

DATE	DESCRIPTION

CLIENT

PROJECT

CHARLESTON EXECUTIVE AIRPORT
CHARLESTON, SOUTH CAROLINA
AIRPORT LAYOUT PLAN

SHEET TITLE

DRAFT

DATA SHEET

ATKINS
482 South Keller Road
Orlando, Florida 32810
Tel. (407) 647-7275
Fax (407) 806-4500
www.atkinsglobal.com/northamerica

JOB NO.: 063028502
DRAWN: AMM
DESIGN: AMM
CHECKED: JDH
DATE: MARCH 2012

C:\pw_work\atkinjw\24680\dms28137\03-05_ALP-FAR-DATA.dwg Mar26,2013 - 3:05pm Plotted By: 24680