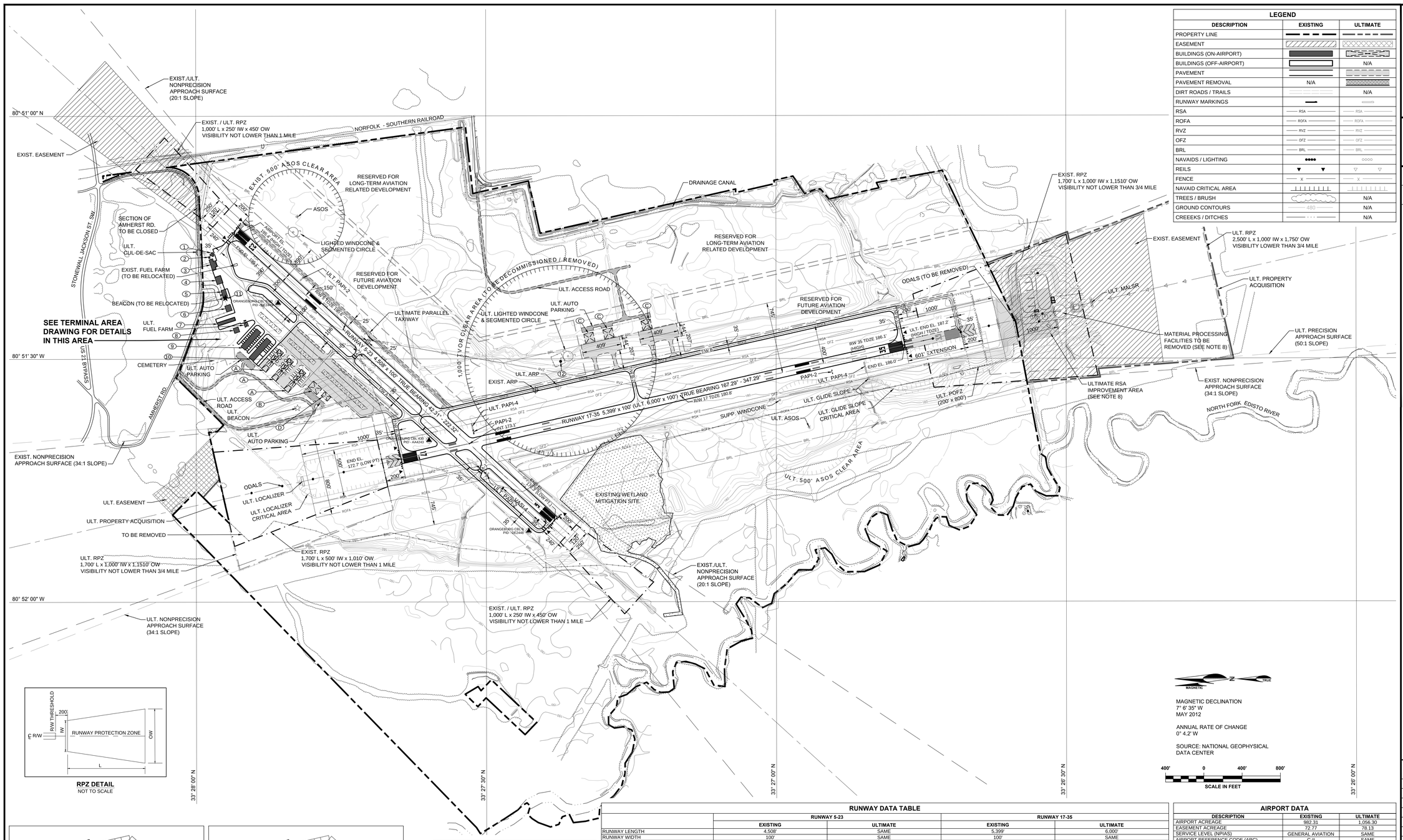

LEGEND

DESCRIPTION	EXISTING	ULTIMATE
PROPERTY LINE		
EASEMENT		
BUILDINGS (ON-AIRPORT)		
BUILDINGS (OFF-AIRPORT)		N/A
PAVEMENT		
PAVEMENT REMOVAL	N/A	
DIRT ROADS / TRAILS		N/A
RUNWAY MARKINGS		
RSA	RSA	RSA
ROFA	ROFA	ROFA
RVZ	RVZ	RVZ
OFZ	OFZ	OFZ
BRL	BRL	BRL
NAVAIDS / LIGHTING		
REILS		
FENCE	X	X
NAVAID CRITICAL AREA		
TREES / BRUSH		N/A
GROUND CONTOURS	480	N/A
CREEEKS / DITCHES		N/A

ORANGEBURG MUNICIPAL AIRPORT
Orangeburg, South Carolina

THE LPA GROUP
AVIATION CONSULTANTS
A UNIT OF MICHAEL BAKER CORPORATION

Designer:	Checked by:
TGM	TF
Technician: TGM	Project Number: 121446

NOTES:

1. EXISTING HOLDLINE MARKINGS FOR RUNWAY 5-23/TAXIWAY A INTERSECTIONS ARE 150' FROM RUNWAY CENTERLINE AND PERPENDICULAR TO TAXIWAY CENTERLINE. ULTIMATE HOLDLINE MARKINGS FOR RUNWAY 5-23/TAXIWAY INTERSECTIONS ARE 125' FROM RUNWAY CENTERLINE AND PERPENDICULAR TO TAXIWAY CENTERLINE. EXISTING/ULTIMATE HOLDLINE MARKINGS FOR RUNWAY 17-35/TAXIWAY B INTERSECTIONS ARE 250' FROM RUNWAY CENTERLINE AND PERPENDICULAR TO TAXIWAY CENTERLINE.
2. COORDINATES SHOWN ARE IN NAD83.
3. ELEVATIONS SHOWN ARE IN NAVD88 AND ARE ABOVE MEAN SEA LEVEL (AMSL).
4. SEE AIRPORT PROPERTY MAP (DRAWING 12) FOR PROPERTY LINE METES AND BOUNDS.
5. NO OFZ OBJECT PENETRATIONS.
6. SEE INNER PORTION OF THE APPROACH SURFACE DRAWINGS FOR THRESHOLD SITING SURFACE OBJECT PENETRATIONS.
7. BUILDING RESTRICTION LINES (BRL) ARE BASED ON THE FOLLOWING: BRL LINES PARALLEL TO RUNWAY 5-23 ARE BASED ON A TRANSITIONAL SURFACE ELEVATION OF 20' OR MOST DEMANDING DESIGN STANDARD. BRL LINES PARALLEL TO RUNWAY 17-35 ARE BASED ON A TRANSITIONAL SURFACE ELEVATION OF 35' OR MOST DEMANDING DESIGN STANDARD.
8. THE ILLUSTRATED RUNWAY EXTENSION INCLUDES FULL RSA CONSTRUCTION AND REMOVAL OF THE MATERIAL PROCESSING FACILITY. PRIOR TO ANY EXTENSION OF RUNWAY 17-35, AN ENVIRONMENTAL ASSESSMENT (EA) AND BENEFIT-COST ANALYSIS (BCA) SHOULD BE PREPARED TO EVALUATE A WIDE RANGE OF EXTENSION ALTERNATIVES THAT CONSIDER ENVIRONMENTAL IMPACTS AND ECONOMIC/COST FACTORS. THE EA AND BCA MAY IDENTIFY A DIFFERENT COURSE OF ACTION THAN WHAT IS SHOWN ON THIS ALP.

RPZ DETAIL
NOT TO SCALE

MAGNETIC DECLINATION
7° 6' 35" W
MAY 2012

ANNUAL RATE OF CHANGE
0° 4.2' W

SOURCE: NATIONAL GEOPHYSICAL DATA CENTER

400' 0 400' 800'
SCALE IN FEET

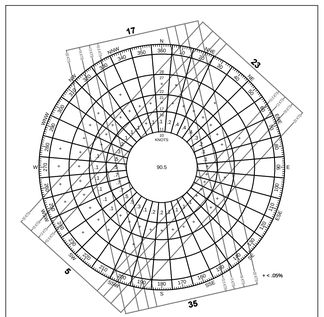

Wind Data Source:
National Climatic Data Center
Station 72311 - Orangeburg, SC
76,485 Observations
Period Of Record: (2000 - 2009)

Crosswind Component (kts/mph)	Wind Coverage % Runway 5-23	Runway 17-35	Combined
10.5 / 12	97.58%	94.03%	98.50%
13 / 15	98.90%	96.70%	99.47%
16 / 18	99.79%	99.09%	99.87%
20 / 23	99.97%	99.77%	99.98%

ALL WEATHER WINDROSE

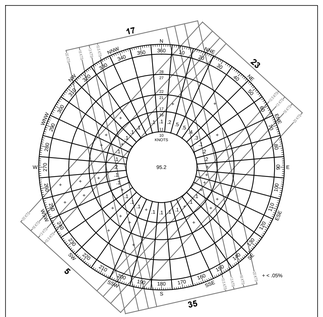

Wind Data Source:
National Climatic Data Center
Station 72311 - Orangeburg, SC
6,861 Observations
Period Of Record: (2000 - 2009)

Crosswind Component (kts/mph)	Wind Coverage % Runway 5-23	Runway 17-35	Combined
10.5 / 12	98.85%	97.86%	99.55%
13 / 15	99.46%	98.96%	99.86%
16 / 18	99.87%	99.79%	99.97%
20 / 23	99.98%	99.96%	100.0%

IFR WINDROSE

EXISTING BUILDING TABLE

#	DESCRIPTION	SIZE (SF)	TOP ELEV.
1	T-HANGAR (1 UNIT) (TO BE REMOVED)	1,027	207.5'
2	ELECTRICAL VAULT BUILDING	192	208.1'
3	MAINT. HANGAR (TO BE REMOVED)	5,942	218.0'
4	OPEN BAY HANGAR	4,880	220.5'
5	TERMINAL (TO BE RELOCATED)	2,210	220.3'
6	OPEN BAY HANGAR	3,900	223.7'
7	T-HANGAR (6 UNIT)	6,270	210.7'
8	EAA BUILDING	2,550	218.1'
9	T-HANGAR (10 UNIT)	14,844	224'
10	BOX (2 UNIT)/T-HANGAR (6 UNIT)	16,680	224'
11	ROTATING BEACON (TO BE RELOCATED)	NA	262.4'
12	TVOR (TO BE DECOMM. / REMOVED)	NA	215.3'

NOTE:
EXISTING BUILDING TOP ELEVATIONS OBTAINED FROM PREVIOUS AIRPORT LAYOUT PLAN AND INFORMATION PROVIDED BY LPA ENGINEERING SURVEY DATA.

ULTIMATE BUILDING TABLE

#	DESCRIPTION	TOP ELEV.
A	BOX (2 UNIT)/T-HANGAR (6 UNIT)	210'
B	FBO (10,000 SF)	222'
C	CORPORATE HANGARS (10,000 SF)	213'
D	TERMINAL (5,000 SF)	211'

NOTE:
ULTIMATE BUILDING TOP ELEVATIONS WERE ESTIMATED BASED ON ESTIMATED ULTIMATE GROUND ELEVATION IN VICINITY PLUS ANTICIPATED CONSTRUCTION HEIGHT.

RUNWAY DATA TABLE

	RUNWAY 5-23 EXISTING	RUNWAY 5-23 ULTIMATE	RUNWAY 17-35 EXISTING	RUNWAY 17-35 ULTIMATE
RUNWAY LENGTH	4,508'	SAME	5,399'	6,000'
RUNWAY WIDTH	100'	SAME	100'	SAME
RUNWAY WIND COVERAGE % (ALL WEATHER)				
10.5KTS / 12MPH	97.58%	SAME	94.03%	SAME
13KTS / 15MPH	98.90%	SAME	96.70%	SAME
16KTS / 18MPH	99.79%	SAME	99.09%	SAME
20KTS / 23MPH	99.97%	SAME	99.77%	SAME
AIRPORT REFERENCE CODE	B-I (SMALL AIRPLANES EXCLUSIVELY)	SAME	C-II	SAME
CRITICAL AIRCRAFT	PIPER PA-34 SENECA	SAME	BOMBARDIER CHALLENGER 605	SAME
TRUE BEARING	42.31° / 222.32°	SAME	167 29° / 347.29°	SAME
EFFECTIVE GRADIENT (%)	0.550% / -0.550%	SAME	0.246% / -0.246%	0.242% / -0.242%
RUNWAY LIGHTING	MIRL	SAME	MIRL	SAME
PAVEMENT STRENGTH:				
SINGLE WHEEL GEAR (LBS)	30,000	SAME	30,000	SAME
DOUBLE WHEEL GEAR (LBS)	50,000	SAME	72,000	SAME
SURFACE COMPOSITION	ASPHALT	SAME	ASPHALT	SAME
PRIMARY SURFACE WIDTH (FAR PART 77)	500'	SAME	1,000'	SAME

	RUNWAY 5 EXISTING	RUNWAY 5 ULTIMATE	RUNWAY 23 EXISTING	RUNWAY 23 ULTIMATE	RUNWAY 17 EXISTING	RUNWAY 17 ULTIMATE	RUNWAY 35 EXISTING	RUNWAY 35 ULTIMATE
APPROACH CATEGORY	NONPRECISION	SAME	NONPRECISION	SAME	NONPRECISION	SAME	NONPRECISION	PRECISION
APPROACH SURFACE SLOPE	20:1	SAME	20:1	SAME	34:1	SAME	34:1	50:1
OBSTACLE CLEARANCE SURFACE/GQS SLOPE	20:1 / 30:1	SAME	20:1 / 30:1	SAME	20:1	20:1 / 30:1	20:1 / 30:1	34:1
FAR PART 77 APPROACH CATEGORY	A (NP)	SAME	A (NP)	SAME	C (NP)	D (NP)	D (NP)	PRECISION
APPROACH MINIMUMS	1 MILE	SAME	1 MILE	SAME	1 MILE	3/4 MILE	3/4 MILE	1/2 MILE
TYPE OF APPROACH TO RUNWAY END	GPS / LPV	SAME	GPS / LPV	SAME	GPS / LNAV	GPS / LPV	GPS / LPV	GPS/LPV, ILS
RSA DIMENSIONS (RUNWAY END)	120' x 240'	SAME	120' x 240'	SAME	500' x 1,000'	SAME	500' x 1,000'	SAME
ROFA DIMENSIONS (RUNWAY END)	250' x 240'	SAME	250' x 240'	SAME	800' x 1,000'	SAME	800' x 1,000'	SAME
OFZ DIMENSIONS (RUNWAY END)	250' x 200'	SAME	250' x 200'	SAME	400' x 200'	SAME	400' x 200'	SAME
RUNWAY END COORDINATES								
LATITUDE (NAD 83)	33° 27' 22.9794" N	SAME	33° 27' 55.9553" N	SAME	33° 27' 38.7986" N	SAME	33° 26' 46.6900" N	33° 26' 40.8823" N
LONGITUDE (NAD 83)	80° 51' 49.9914" W	SAME	80° 51' 14.1737" W	SAME	80° 51' 42.3619" W	SAME	80° 51' 28.3409" W	80° 51' 26.7785" W
RUNWAY END ELEVATION (NAVD 88)	170.3' AMSL	SAME	195.1' AMSL	SAME	172.7' AMSL	SAME	186.0' AMSL	187.2' AMSL
TOUCHDOWN ZONE EL (NAVD 88)	190.6' AMSL	SAME	195.4' AMSL	SAME	180.8' AMSL	SAME	186.1' AMSL	187.2' AMSL
RUNWAY MARKINGS	NONPRECISION	SAME	NONPRECISION	SAME	NONPRECISION	PRECISION	NONPRECISION	PRECISION
NAVAIDS	REIL, VASI-4	REIL, PAPI-2	REIL	REIL, PAPI-2	REIL, ODALS, PAPI-2	REIL, ODALS, PAPI-4	REIL, ODALS, PAPI-2	PAPI-4, GS, LOC, MALSR
RUNWAY PROTECTION ZONE:								
LENGTH	1,000'	SAME	1,000'	SAME	1,700'	1,700'	1,700'	2,500'
INNER WIDTH	250'	SAME	250'	SAME	500'	1,000'	1,000'	1,000'
OUTER WIDTH	450'	SAME	450'	SAME	1,010'	1,510'	1,510'	1,750'
ACRES	8.035	SAME	8.035	SAME	29.465	48.978	48.978	78.914
DISPLACED THRESHOLD COORDINATES								
LATITUDE (NAD 83)	N/A	N/A	N/A	N/A	N/A	N/A	N/A	N/A
LONGITUDE (NAD 83)	N/A	N/A	N/A	N/A	N/A	N/A	N/A	N/A
DISPLACED THRESHOLD ELEVATION	N/A	N/A	N/A	N/A	N/A	N/A	N/A	N/A
DISPLACED THRESHOLD DISTANCE	N/A	N/A	N/A	N/A	N/A	N/A	N/A	N/A

AIRPORT DATA

DESCRIPTION	EXISTING	ULTIMATE
AIRPORT ACREAGE	982.31	1,056.30
EASEMENT ACREAGE	72.77	78.13
SERVICE LEVEL (NPIAS)	GENERAL AVIATION	SAME
AIRPORT REFERENCE CODE (ARC)	C-II	SAME
AIRPORT ELEVATION (MSL)	195.4' AMSL	SAME
MEAN MAX. TEMP. (HOTTEST MONTH)	92° F (JULY)	SAME
AIRPORT REFERENCE POINT LATITUDE	33° 27' 24.9041" N	33° 27' 22.5487" N
(NAD 83) LONGITUDE	80° 51' 33.8640" W	80° 51' 33.5032" W
MAGNETIC DECLINATION (AUGUST 2011)	7° 06' 35" W	0° 4.2' W / YEAR
AIRPORT IDENTIFIER	OGB	SAME
TAXIWAY LIGHTING	MITL	SAME
AIRPORT NAVAIDS	BEACON, WINDCONE, SEGMENTED CIRCLE, GPS, TVOR, VASI-4, PAPI-2, REILS, ODALS	BEACON, WINDCONE, SEGMENTED CIRCLE, GPS, ILS, PAPI-2,PAPI-4, REILS, ODALS, MALSR

MODIFICATION TO FAA DESIGN STANDARDS

DESCRIPTION	DESIGN STANDARD	AERONAUTICAL STUDY NUMBER	FAA APPROVAL
	NONE		

AIRPORT SPONSOR APPROVAL

THIS AIRPORT DRAWING IS APPROVED BY:
(SIGNATURE) DATE: 06-14-12
NAME: John H. Yow
TITLE: City Administrator, City of Orangeburg

CONSTRUCTION NOTICE REQUIREMENT

TO PROTECT OPERATIONAL SAFETY AND ULTIMATE DEVELOPMENT, ALL PROPOSED CONSTRUCTION ON THE AIRPORT MUST BE COORDINATED BY THE AIRPORT OWNER WITH THE FAA AIRPORTS DISTRICT OFFICE PRIOR TO CONSTRUCTION. FAA'S REVIEW TAKES APPROXIMATELY 60 DAYS.

FAA DISCLAIMER

THE CONTENTS DO NOT NECESSARILY REFLECT THE OFFICIAL VIEWS OR POLICIES OF THE FAA. THE ACCEPTANCE OF THIS PLAN BY THE FAA DOES NOT IN ANY WAY CONSTITUTE A COMMITMENT ON THE PART OF THE UNITED STATES TO PARTICIPATE IN ANY DEVELOPMENT DEPICTED HEREIN NOR DOES IT INDICATE THAT THE PROPOSED DEVELOPMENT IS ENVIRONMENTALLY ACCEPTABLE IN ACCORDANCE WITH PUBLIC LAWS.

REVISIONS

No.	Description	Date	By

Project Name:
AIRPORT LAYOUT PLAN UPDATE

Drawing Name:
AIRPORT LAYOUT PLAN DRAWING

FAA A.I.P. Project Number: 3-45-0045-017-2010

Date: MAY 2012	Division: PLANNING
Scale: (30X42) 1" = 400'	Drawing Number: 2

\\tampf1fs1\Tampa\Planning\Orangeburg - OGB\ALP\Drawings\ALP Drawings\ALP Set\02-OGB-ALP.dwg Modified: Jun 13, 2012 - 10:47am Plotted: Jun 14, 2012 - 10:28am tmcnall