South Carolina Department of Commerce
Division of Aeronautics
Airport Directory

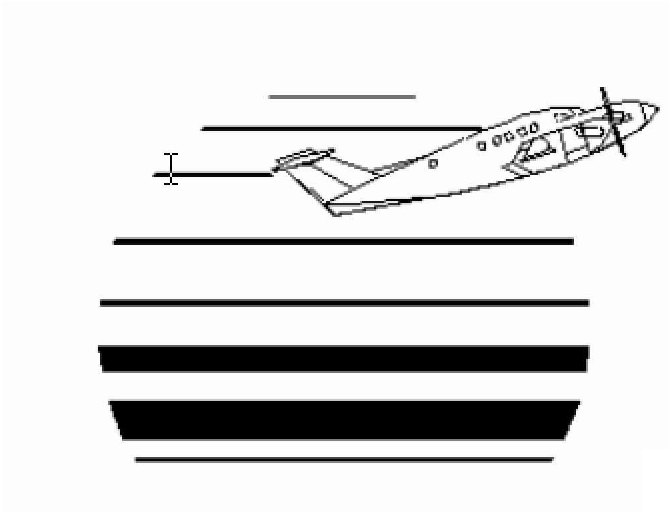

List of Airport Contacts

Date Printed: 08/04/2016

Key Contacts For - AIKEN MUNI

Mr. Don Barnes
Chairman
190 Flowing Well Road
Wagener, SC 29164
Aiken Municipal Airport Commission
Airport: AIKEN MUNI
Email: aikenair@aol.com
County: Aiken
Phone: (803) 648-2083 Alt: (803) 646-6015
Fax:
Key Contact: Yes

Mr. Stuart Bedenbaugh
Airport Manager
P.O Box 1177
Aiken, SC 29805
City of Aiken
Airport: AIKEN MUNI
Email: sbedenbaugh@CityofAikenSC.gov
County: Aiken
Phone: (803) 642-7654
Fax:
Key Contact: No

Mr. George Grinton
Engineer
PO Box 1177
Aiken, SC 29802-1177
City of Aiken
Airport: AIKEN MUNI
Email: ggrinton@CityofAikenSC.gov
County: Aiken
Phone: (803) 642-7610
Fax: (803) 642-7717
Key Contact: Yes

Mr. Mike Laver
FBO
129 Aviation Blvd
Aiken, SC 29805-8921
Aiken Aviation Enterprises, Inc
Airport: AIKEN MUNI
Email: mike@aikenaviation.com
County: Aiken
Phone: (803) 648-7803
Fax: (803) 648-7804
Key Contact: Yes

Mr. Cliff Sims
Tenant
PO Box 312
Aiken, SC 29802
Legends
Airport: AIKEN MUNI
Email:
County: Aiken
Phone: (803) 648-9571
Fax:
Key Contact: Yes

Key Contacts For - ALLENDALE COUNTY

FBO

, SC
Allendale County
Airport: ALLENDALE COUNTY
Email:
County: Allendale
Phone: (803) 584-3801
Fax: (803) 584-4447
Key Contact: Yes

Ms. Joann Hill
Administrator
P.O. Box 190
Allendale, SC 29810
Allendale County
Airport: ALLENDALE COUNTY
Email: vjhill@allendalecounty.com
County: Allendale
Phone: (803) 584-3438
Fax:
Key Contact: Yes

Ms. Betty Baker
Airport Manager
467 Airport Loop
Fairfax, SC 29827
Allendale County Airport
Airport: ALLENDALE COUNTY
Email: bbaker@allendalecounty.com
County: Allendale
Phone: (803) 584-3801
Fax:
Key Contact: No

FBO

, SC
Anderson County Aviation
Airport: ANDERSON RGNL
Email:
County: Anderson
Phone: (864) 964-5656
Fax: (864) 231-2297
Key Contact: Yes

Mr. Chris Maxwell
Tenants
5835 Airport Road
Anderson, SC 29626
Anderson Aircraft Maintenance
Airport: ANDERSON RGNL
Email: cmaxwell@andersoncountysc.org
County: Anderson
Phone: (864) 332-5303 Alt: (864) 314-5279
Fax: (864) 332-5315
Key Contact: Yes

Mr. Justin Jullian
Airport Director
5805 Airport Rd
Anderson, SC 29626
Anderson County
Airport: ANDERSON RGNL
Email: ajjulian@andersoncountysc.org
County: Anderson
Phone: (864) 260-4188 Alt: (864) 314-5912
Fax: (864) 260-4870
Key Contact: No

Key Contacts For - BAMBERG COUNTY

Ms. Booker Patrick
Finance Director
PO Box 149
Bamberg, SC 29003-0149
Bamberg County
Airport: BAMBERG COUNTY
Email: thomastm02@bellsouth.net
County: Bamberg
Phone: (803) 245-5191 Alt: (803) 943-8051
Fax: (803) 245-3027
Key Contact: Yes

Mr. Joey Preston
County Administrator
PO Box 149
Bamberg, SC 29003-0149
Bamberg County
Airport: BAMBERG COUNTY
Email: jpreston@bambergcountysc.gov
County: Bamberg
Phone: (803) 245-5191 Alt: (803) 965-8085
Fax: (803) 245-3027
Key Contact: No

Mr. Jim Tobul
Chairman
367 Highland Circle
Bamberg, SC 29003
Bamberg County Airport Commission
Airport: BAMBERG COUNTY
Email: jtobul@tobul.com
County: Bamberg
Phone: (803) 245-0366 Alt: (803) 245-5047
Fax:
Key Contact: Yes

Key Contacts For - BARNWELL RGNL

FBOss

, SC
Barnwell County
Airport: BARNWELL RGNL
Email:
County: Barnwell
Phone: (803) 259-1090
Fax: (803) 259-4596
Key Contact: Yes

Mr. Tim Freer
Airport Manager
155 Airport Rd.
Barnwell, SC 29812
Barnwell Regional Airport
Airport: BARNWELL RGNL
Email: barnwellairport@bellsouth.net
County: Barnwell
Phone: (803) 450-8015
Fax: (803) 259-4596
Key Contact: Yes

Mr. P.F. Beck
Chairman
120 Hagood Avenue
Barnwell, SC 29812
Barnwell County Airport Commission
Airport: BARNWELL RGNL
Email: Barnwellairport@bellsouth.net
County: Barnwell
Phone: (803) 259-5959 Alt: (803) 259-6381
Fax: (803) 259-4596
Key Contact: No

Mr. Pickens Williams
County Administrator
57 Wall St., Office 126
Barnwell, SC 29812
Barnwell County
Airport: BARNWELL RGNL
Email: fpwilliams@barnwellsc.com
County: Barnwell
Phone: (803) 541-1010
Fax: (803) 541-1104
Key Contact: Yes

FBO
PO Box 23739
Hilton Head Island, SC 29925-3739
Beaufort County Airport
Airport: BEAUFORT COUNTY
Email:
County: Beaufort
Phone: (843) 255-2972 Alt: (843) 252-2995
Fax:
Key Contact: Yes

Mr. Joel Phillips
Airport Manager
39 Airport Circle
Beaufort, SC 29907

Airport: BEAUFORT COUNTY
Email: jphillips@bcgov.net
County: Beaufort
Phone: (843) 255-2972
Fax:
Key Contact: Yes

Mrs. Alicia Holland
Finance & Admin Manager
P.O. Drawer 1228
Beaufort, SC 29901-1228
Beaufort County Finance Department
Airport: BEAUFORT COUNTY
Email: aholland@bcgov.net
County: Beaufort
Phone: (843) 255-2296
Fax: (843) 255-9422
Key Contact: Yes

Mr. Jon Rembold
Airport Manager
39 Airport Circle
Beaufort, SC 29907
Sea Island Aviation
Airport: BEAUFORT COUNTY
Email: jrembold@bcgov.net
County: Beaufort
Phone: (843) 770-2003 Alt: (843) 252-4301
Fax: (843) 770-2005
Key Contact: No

FBO
616 Whitesville Rd.
Moncks Corner, SC 29461
Berkeley County Airport
Airport: BERKELEY COUNTY
Email:
County: Berkeley
Phone: (843) 899-7711
Fax: (843) 719-4752
Key Contact: Yes

Mr. Chris Gallapis
Tenant

, SC
Light Aircraft of Charleston
Airport: BERKELEY COUNTY
Email: cgallapis1@comcast.net
County: Berkeley
Phone: (843) 729-9564
Fax:
Key Contact: Yes

Ms Stacy Thomas
Airport Manager
616 Whitesville Rd.
Moncks Corner, SC 29461
Berkeley County Airport
Airport: BERKELEY COUNTY
Email: stacy.thomas@berkeleycountysc.gov
County: Berkeley
Phone: (843) 719-4750 Alt: (843) 906-8622
Fax: (843) 719-4752
Key Contact: No

Ms. Elizabeth Cannon
Attorney
1003 Highway 52
Moncks Corner, SC 29461-6120
Berkeley County
Airport: BERKELEY COUNTY
Email: ecannon@berkeleycountysc.gov
County: Berkeley
Phone: (843) 719-4011
Fax: (843) 719-4306
Key Contact: Yes

Mr. David Taschner
Director, Facilities and Grounds

, SC
Berkeley County
Airport: BERKELEY COUNTY
Email: dtaschner@berkeleycounty.sc.gov
County: Berkeley
Phone: (843) 719-4135
Fax:
Key Contact: Yes

Key Contacts For - BRANHAMS

Mr. Dwayne Weatherford
Airport Owner
N. 46 Creekview Dr.
Darlington, SC 29540
Branham Airport
Airport: BRANHAMS
Email: dw12sc@aol.com
County: Darlington
Phone: (843) 307-0070 Alt: (843) 393-5006
Fax:
Key Contact: No

Base Commander
437 MSG, 102 East Hill Blvd.
North Charleston, SC 29404
USAF Base
Airport: CHARLESTON AFB/INTL
Email:
County: Charleston
Phone: (843) 963-2200
Fax:
Key Contact: Yes

Mr. Pat Barry
Manager
5500 International Blvd.
North Charleston, SC 29418
G2 Secure Services
Airport: CHARLESTON AFB/INTL
Email:
County: Charleston
Phone: (843) 767-0950
Fax:
Key Contact: Yes

Mr. Al Campbell
Manager
6070 Perimeter Road
North Charleston, SC 29418
Interstate Turbine Aircraft Repair Services
Airport: CHARLESTON AFB/INTL
Email:
County: Charleston
Phone: (843) 554-9191
Fax:
Key Contact: Yes

Mr. Paul Campbell
Airport Director
5500 International Blvd. #101
North Charleston, SC 29418-6911
Charleston County Aviation Authority
Airport: CHARLESTON AFB/INTL
Email: pcampbell@chs-airport.com
County: Charleston
Phone: (843) 767-7000
Fax: (843) 760-3020
Key Contact: Yes

Mr. Rob Carew
Director of Properties
5500 International Blvd
N. Charleston, SC 29418
Charleston County Aviation Authority
Airport: CHARLESTON AFB/INTL
Email: rcarew@chs-airport.com
County: Charleston
Phone: (843) 767-7000
Fax:
Key Contact: Yes

Mr. Bill Carroll
Engineer

, SC
United States Air Force
Airport: CHARLESTON AFB/INTL
Email:
County: Charleston
Phone:
Fax:
Key Contact: Yes

Mr. Chris Castillo
Manager
5500 International Blvd
Charleston, SC 29418
Alaska Airlines
Airport: CHARLESTON AFB/INTL
Email:
County: Charleston
Phone: (843) 552-7141
Fax:
Key Contact: Yes

Mr. Kevin Connolly
Manager
5500 International Blvd.
North Charleston, SC 29418
Hertz Rental Car
Airport: CHARLESTON AFB/INTL
Email:
County: Charleston
Phone: (843) 767-4554
Fax:
Key Contact: Yes

Mr. Britton Corbin
Engineer
5500 International Blvd
Charleston, SC 29418-6911
Charleston County Aviation Authority
Airport: CHARLESTON AFB/INTL
Email: bcorbin@chs-airport.com
County: Charleston
Phone: (843) 760-7020 Alt: (843) 276-9708
Fax: (843) 760-3020
Key Contact: Yes

Ms. Sherrie Erwin
Manager
5500 International Blvd
Charleston, SC 29418
FSS (Ground Handling Company)
Airport: CHARLESTON AFB/INTL
Email:
County: Charleston
Phone:
Fax:
Key Contact: Yes

Mr. Grady Glover
Manager
5500 International Blvd
Carleston, SC 29418
Southwest Airlines
Airport: CHARLESTON AFB/INTL
Email:
County: Charleston
Phone: (843) 789-5470
Fax:
Key Contact: Yes

Mr. Belinda Hestir
Manager
5500 International Blvd.
North Charleston, SC 29418
Avis/Budget Rental Cars
Airport: CHARLESTON AFB/INTL
Email:
County: Charleston
Phone: (843) 767-7042
Fax:
Key Contact: Yes

Mr. Michael Emlaw
Manager
5777 S. Aviation Ave.
North Charleston, SC 29406
NOAA National Weather Service
Airport: CHARLESTON AFB/INTL
Email:
County: Charleston
Phone: (843) 744-2236
Fax:
Key Contact: Yes

Ms. Stephanie Faison
Manager
577 South Aviation Avenue
North Charleston, SC 29418
FAA Air Traffic Control
Airport: CHARLESTON AFB/INTL
Email: Stephanie.Faison@faa.gov
County: Charleston
Phone: (843) 414-2802
Fax:
Key Contact: Yes

Ms. Ginger Graham
Manager
5500 International Blvd., Box 119
North Charleston, SC 29418
National/Alamo Car Rental
Airport: CHARLESTON AFB/INTL
Email:
County: Charleston
Phone: (843) 767-3351
Fax:
Key Contact: Yes

Mr. Charles Hoke
Manager
3390 Rental Car Lane
North Charleston, SC 29418
Airport Terminal Services, Inc.-Aircraft Fueling
Airport: CHARLESTON AFB/INTL
Email: charles.hoke@alliedaviation.com
County: Charleston
Phone: (843) 767-5282
Fax:
Key Contact: Yes

Mr. Bill Keigans
FBO
6060 South Aviation Avenue, Suite 99
North Charleston, SC 29406
Atlantic Aviation Services
Airport: CHARLESTON AFB/INTL
Email:
County: Charleston
Phone: (843) 746-7600 Alt: (843) 746-7606
Fax: (843) 746-7642
Key Contact: Yes

Mr. Chris Plunkett
Manager
5500 International Blvd
Charleston, SC 29418
JetBlue Airways
Airport: CHARLESTON AFB/INTL
Email:
County: Charleston
Phone:
Fax:
Key Contact: Yes

Mr. David Stapleton
Manager
5056 International Blvd.
North Charleston, SC 29418
Federal Express
Airport: CHARLESTON AFB/INTL
Email:
County: Charleston
Phone: (843) 747-9086
Fax:
Key Contact: Yes

Mr. Billy Swails
Chairman

North Charleston, SC 29401
Charleston County Aviation Authority
Airport: CHARLESTON AFB/INTL
Email:
County: Charleston
Phone:
Fax:
Key Contact: Yes

Ms. Andy Mathura
Manager
5500 International Blvd., #114-A
North Charleston, SC 29418
IH Services, Inc.
Airport: CHARLESTON AFB/INTL
Email:
County: Charleston
Phone: (843) 952-6532
Fax:
Key Contact: Yes

Mr. Roger Schwartz
Operations Manager
5500 International Blvd
Charleston, SC 29418
Charleston County Aviation Authority
Airport: CHARLESTON AFB/INTL
Email: rschwartz@chs-airport.com
County: Charleston
Phone: (843) 767-7186 Alt: (843) 514-1329
Fax: (843) 767-7094
Key Contact: Yes

Mr. Deborah Strong
Manager
5500 International Blvd., #107
North Charleston, SC 29418
Delta Airlines
Airport: CHARLESTON AFB/INTL
Email:
County: Charleston
Phone: (843) 767-7310
Fax:
Key Contact: Yes

Mr. Ben Wells
FBO
5875 S. Aviation Avenue
North Charleston, SC 29406
Landmark Aviation
Airport: CHARLESTON AFB/INTL
Email: wwells@landmarkaviation.com
County: Charleston
Phone: (843) 414-9200
Fax: (843) 414-9201
Key Contact: Yes

Key Contacts For - CHARLESTON AFB/INTL

Mr. Corey Winer
Manager
5500 International Blvd., #109
North Charleston, SC 29418
American
Airport: CHARLESTON AFB/INTL
Email:
County: Charleston
Phone: (843) 207-5121
Fax: (843) 207-5182
Key Contact: Yes

Key Contacts For - CHARLESTON EXECUTIVE

Mr. Paul Aiken
FBO

Johns Island, SC 29455
Atlantic Aviation
Airport: CHARLESTON EXECUTIVE
Email: paul.aiken@atlanticaviation.com
County: Charleston
Phone: (843) 559-2401
Fax:
Key Contact: Yes

Mr. Paul Campbell
Airport Director
5500 International Blvd.
Chaleston, SC 29418
Charleston County Aviation Authority
Airport: CHARLESTON EXECUTIVE
Email: pcambell@chs-airport.com
County: Charleston
Phone: (843) 767-7000
Fax:
Key Contact: Yes

Mr. Kim LeCroy
Manager
2700 Fort Trenholm Rd.
Johns Island, SC 29455
U.S. Coast Guard
Airport: CHARLESTON EXECUTIVE
Email:
County: Charleston
Phone: (843) 599-9033
Fax:
Key Contact: Yes

Mr. Kurt Schmidt
Manager
6060 South Aviation Ave.
North Charleston, SC 29418
Atlantic Aviation Services
Airport: CHARLESTON EXECUTIVE
Email:
County: Charleston
Phone: (843) 746-7600
Fax: (843) 746-7642
Key Contact: Yes

Mr. Mike Barba
Manager
2700 Fort Trenholm Rd.
Johns Island, SC 29455
Professional Flight
Airport: CHARLESTON EXECUTIVE
Email:
County: Charleston
Phone: (843) 559-3331
Fax:
Key Contact: Yes

Mr. Larry Hodge
Manager
2700 Fort Trenholm Rd.
Johns Island, SC 29455
Charleston County Mosquito Abatement
Airport: CHARLESTON EXECUTIVE
Email:
County: Charleston
Phone: (843) 599-9033
Fax:
Key Contact: Yes

Mr. Rex Perdue
Operations Manager
5500 International Blvd.
Charleston, SC 29418
Charleston County Aviation Authority
Airport: CHARLESTON EXECUTIVE
Email: rperdue@chs-airport.com
County: Charleston
Phone: (843) 767-1100
Fax: (843) 760-3020
Key Contact: Yes

Key Contacts For - CHERAW MUNI/LYNCH BELLINGER FIELD

Mr. Ricky Griggs
Chairman
606 Coach Road
Cheraw, SC 29520
Cheraw Municipal Airport Commission
Airport: CHERAW MUNI/LYNCH BELLINGER FIELD
Email:
County: Chesterfield
Phone: (843) 537-3300
Fax:
Key Contact: Yes

Mr. Mike Smith
Administrator
PO Box 219
Cheraw, SC 29520-0219
Town of Cheraw
Airport: CHERAW MUNI/LYNCH BELLINGER FIELD
Email: msmith@cheraw.com
County: Chesterfield
Phone: (843) 537-8400
Fax: (843) 537-8407
Key Contact: No

Mr. Wendell Hall
FBO
Highway 9 West
Cheraw, SC 29520
Hall Aviation
Airport: CHERAW MUNI/LYNCH BELLINGER FIELD
Email: halljet@hotmail.com
County: Chesterfield
Phone: (843) 537-6423 Alt: (843) 537-9436
Fax: (843) 537-6423
Key Contact: Yes

Key Contacts For - CHESTER CATAWBA RGNL

Mr. Wayne Goodyear
Chairman
PO Box 537
Chester, SC 29706
Chester Catawba Regional Airport Commission
Airport: CHESTER CATAWBA RGNL
Email: wgoodyear@truvista.net
County: Chester
Phone: (803) 385-3154 Alt: (803) 789-3413
Fax: (803) 385-3156
Key Contact: No

Mr. Keith Roach
FBO
1854A Piper Drive
Chester, SC 29706
Chester Aviation
Airport: CHESTER CATAWBA RGNL
Email: keithroach1@gmail.com
County: Chester
Phone: (803) 385-6664 Alt: (803) 519-7009
Fax: (803) 385-6664
Key Contact: Yes

Mr. Danny Smith
Tenant
1903 King Air Drive
Chester, SC 29706
Skydive Carolina
Airport: CHESTER CATAWBA RGNL
Email:
County: Chester
Phone: (803) 581-5867
Fax:
Key Contact: Yes

Key Contacts For - CLIO CROP CARE

Mr. Ken Hanke
Owner
PO Box 422
Clio, SC 29525
Clio Crop Care
Airport: CLIO CROP CARE
Email: agpilot@copper.net
County: Marlboro
Phone: (843) 586-9225
Fax:
Key Contact: No

Manager
3026 Aviation Way
West Columbia, SC 29170
Republic Parking
Airport: COLUMBIA METROPOLITAN
Email: wlove@republicparking.com
County: Richland
Phone: (803) 822-8474
Fax: (803) 822-0180
Key Contact: Yes

Station Manager
3020 Aviation Way
West Columbia, SC 29170
American
Airport: COLUMBIA METROPOLITAN
Email:
County: Richland
Phone: (803) 822-5093 Alt: (800) 428-4322
Fax: (803) 822-5092
Key Contact: Yes

Mr. Paul Bass
FBO
2861 Aviation Way
West Columbia, SC 29170
Eagle Aviation
Airport: COLUMBIA METROPOLITAN
Email:
County: Lexington
Phone: (803) 822-5555
Fax: (803) 822-5545
Key Contact: Yes

Mr. Chris Berry
Manager
1128 Wattling Road
West Columbia, SC 29170
Berry's Air Freight
Airport: COLUMBIA METROPOLITAN
Email: berrycab@aol.com
County: Richland
Phone: (803) 796-7557
Fax: (803) 796-7781
Key Contact: Yes

Manager
880 D-Ermine Road
Springdale, SC 29170
Hertz Rent A Car
Airport: COLUMBIA METROPOLITAN
Email:
County: Richland
Phone: (803) 926-5297
Fax: (809) 926-5873
Key Contact: Yes

Mr.
Fire Chief
P. O. Box 280037
Columbia, SC 29228-0037
Columbia Metropolitan Airport
Airport: COLUMBIA METROPOLITAN
Email:
County: Richland
Phone: (803) 822-5030 Alt: (803) 960-6582
Fax: (803) 822-5053
Key Contact: Yes

Mr. J. Bell
Tenant
2404 Edmund Highway
West Columbia, SC 29170
Bell Aviation
Airport: COLUMBIA METROPOLITAN
Email: don@bellaviation.com
County: Richland
Phone: (803) 822-4114
Fax: (803) 822-8122
Key Contact: Yes

Mr. Randy Blackmon
Public Safety Director
P. O. Box 280037
Columbia, SC 29228-0037
Columbia Metropolitan Airport/Police Department
Airport: COLUMBIA METROPOLITAN
Email: r.blackmon@columbiaairport.com
County: Richland
Phone: (803) 822-5024 Alt: (803) 960-7362
Fax: (803) 822-5147
Key Contact: Yes

Mr. John Dickerson
FBO
2406 Edmund Highway
West Columbia, SC 29170
Bankair/Columbia Aviation
Airport: COLUMBIA METROPOLITAN
Email: Bankair1@msn.com
County: Richland
Phone: (803) 822-8832
Fax: (803) 822-8775
Key Contact: Yes

Mr. Wayne Henson
Port Director
101 Trade Zone Driv e, Suite 10A
West Columbia, SC 29170
US Customs Service
Airport: COLUMBIA METROPOLITAN
Email: wayne.henson@dhs.gov
County: Richland
Phone: (803) 822-5251 Alt: (803) 315-5901
Fax: (803) 822-5055
Key Contact: Yes

Mr. Dan Mann
Airport Director
125-A Summer Lake Drive
West Columbia, SC 29170
Richland-Lexington Airport Commission
Airport: COLUMBIA METROPOLITAN
Email: d.mann@columbiaairport.com
County: Lexington
Phone: (803) 822-7878 Alt: (803) 206-9564
Fax: (803) 822-5141
Key Contact: No

Mr. Francis Murray
Manager of Planning & Development
125A Summer Lake Drive
West Columbia, SC 29170
Collumbia Metropolitna Airport
Airport: COLUMBIA METROPOLITAN
Email: F.Murray@columbiaairport.com
County: Richland
Phone: (803) 822-5048 Alt: (803) 315-8370
Fax:
Key Contact: Yes

Mr.
Mr Lynne Douglas
Marketing Director
P. O. Box 280037
Columbia, SC 29228-0037
Richland-Lexington Airport Commission
Airport: COLUMBIA METROPOLITAN
Email: l.douglas@columbiaairport.com
County: Richland
Phone: (803) 822-5020 Alt: (803) 960-1280
Fax: (803) 822-5141
Key Contact: Yes

Mr. Dave Lipski
Tenant
2861 Aviation Way
West Columbia, SC 29170
Eagle Aviation
Airport: COLUMBIA METROPOLITAN
Email: dlipski@eagle-aviation.com
County: Lexington
Phone: (803) 822-5555
Fax: (803) 822-5529
Key Contact: Yes

Mr. Shawn McKenzie
ATCT Manager
2821 Aviation Way
West Columbia, SC 29170
Federal Aviation Administration (FAA)
Airport: COLUMBIA METROPOLITAN
Email: shawn.d.mckenzie@faa.gov
County: Richland
Phone: (803) 822-4500 Alt: (803) 822-4401
Fax: (803) 822-4512
Key Contact: Yes

Mr. Doug Thomas
Tenant

, SC
Eagle Aviation
Airport: COLUMBIA METROPOLITAN
Email:
County: Lexington
Phone:
Fax:
Key Contact: Yes

Key Contacts For - CONWAY-HORRY COUNTY

Mr. Curtis Brooks
FBO
1700 Airport Rd
Conway, SC 29527
Conway Aviation
Airport: CONWAY-HORRY COUNTY
Email:
County: Horry
Phone: (843) 397-9111
Fax:
Key Contact: Yes

Mr. Scott VanMoppes
Interim Director
1250 Airdrome Ave.
Myrtle Beach, SC 29577
Myrtle Beach Aviation
Airport: CONWAY-HORRY COUNTY
Email: svanmoppes@horrycounty.org
County: Horry
Phone: (843) 448-1580 Alt: (800) 474-5697
Fax: (843) 477-1769
Key Contact: No

Key Contacts For - DARLINGTON COUNTY JETPORT

Mr. Terence Arrington
Administrator
1 Public Square, Room 210
Darlington, SC 29532-3213
Darlington County
Airport: DARLINGTON COUNTY JETPORT
Email: tarrington@darcosc.com
County: Darlington
Phone: (843) 398-4100
Fax: (843) 393-8539
Key Contact: Yes

Mr. Barry Kennett
Manager
1 Public Square
Darlington, SC 29532

Airport: DARLINGTON COUNTY JETPORT
Email: bkennett@darcosc.net
County: Darlington
Phone: (843) 393-9928 Alt: (843) 307-7710
Fax: (843) 393-9930
Key Contact: Yes

Key Contacts For - DILLON COUNTY

Ms. Winna Miller
Airport Manager
PO Box 449
Dillon, SC 29536
Dillon County
Airport: DILLON COUNTY
Email: dillonriskmgr@aol.com
County: Dillon
Phone: (843) 627-6153 Alt: (843) 841-5029
Fax: (843) 774-1443
Key Contact: No

Mr. Clay Young
County Administrator
PO Box 449
Dillon, SC 29536-0449
Dillon County
Airport: DILLON COUNTY
Email: dillon1447@aol.com
County: Dillon
Phone: (843) 774-1401
Fax: (843) 774-1443
Key Contact: Yes

Key Contacts For - DONALDSON FIELD

Mr. J. Boyce
Fire Chief
2291 Perimeter Road
Greenville, SC 29605
Donaldson Center Fire Department
Airport: DONALDSON FIELD
Email: dcfdchiefjrb@hotmail.com
County: Greenville
Phone: (864) 277-1429
Fax: (864) 277-0110
Key Contact: Yes

Mr. Jody Bryson
Director of Properties
2 Exchange Street
Greenville, SC 29605
Donaldson Development Commission
Airport: DONALDSON FIELD
Email: jody.bryson@sc-tac.com
County: Greenville
Phone: (864) 277-3155 Alt: (864) 420-0220
Fax: (864) 277-6766
Key Contact: Yes

Mr. J. Christoper Davis
FBO
552 Perimeter Rd.
Greenville, SC 29605
AvServe
Airport: DONALDSON FIELD
Email: jcdavis@davisco.com
County: Greenville
Phone: (864) 299-0314 Alt: (864) 380-6433
Fax: (864) 299-0324
Key Contact: Yes

Mr. Ed Hawk
ATCT Manager
698 Delaware Dr.
Greenville, SC 29605
Donaldson Center (RVA)
Airport: DONALDSON FIELD
Email: gyhtwr@donaldsoncenter.com
County: Greenville
Phone: (864) 277-4225 Alt: (864) 277-4945
Fax:
Key Contact: Yes

Ms. Monica Brownlee
FBO
600 Delaware St.
Greenville, SC 29605
Stevens Aviation
Airport: DONALDSON FIELD
Email: mbrownlee@stevensaviation.com
County: Greenville
Phone: (864) 678-6025
Fax: (864) 678-6215
Key Contact: Yes

Mr. Craig Carter
Owner
2282 Perimeter Road
Greenville, SC 29605
Air Charter Express
Airport: DONALDSON FIELD
Email:
County: Greenville
Phone: (864) 277-4004
Fax: (864) 277-4244
Key Contact: Yes

Ms. Candy Eslinger
Public Information Director
244 Terminal Drive
Greenville, SC 29605
Lockheed Martin
Airport: DONALDSON FIELD
Email: candy.l.eslinger@lmco.com
County: Greenville
Phone: (864) 422-6455
Fax: (864) 422-6525
Key Contact: Yes

Ms. Cheri Little
FBO
126 Club Loop
Greenville, SC 29605
Donaldson Jet Center
Airport: DONALDSON FIELD
Email: cheri@donaldsonjetcenter.com
County: Greenville
Phone: (864) 277-8184
Fax: (864) 277-1159
Key Contact: Yes

Key Contacts For - DONALDSON FIELD

Mr. Danny Moyd
Airport Manager
2 Exchange Street
Greenville, SC 29605
Donaldson Development Commission
Airport: DONALDSON FIELD
Email: danny.moyd@sc-tac.com
County: Greenville
Phone: (864) 277-3152 Alt: (864) 918-8835
Fax:
Key Contact: Yes

Mr. Carl Washburn
Operations Manager
111 Connecticut Court
Greenville, SC 29605
Greenville Tech Aircraft Maint.Training Center
Airport: DONALDSON FIELD
Email: washbcpw@gvltec.edu
County: Greenville
Phone: (864) 422-1762 Alt: (864) 277-1192
Fax: (864) 422-8963
Key Contact: Yes

Key Contacts For - DRY SWAMP

Mr. Kurt Von Graff
Owner
126 Dry Swamp Road
Cordova, SC 29039
Dry Swamp Airport
Airport: DRY SWAMP
Email:
County: Orangeburg
Phone: (803) 534-3157 Alt: (803) 539-5911
Fax:
Key Contact: No

Key Contacts For - EDGEFIELD COUNTY

Mr. Johnny Anderson
Airport Manager
PO Box 237
Trenton, SC 29847
Plane Fun, Inc.
Airport: EDGEFIELD COUNTY
Email: johnnyfanderson@bellsouth.net
County: Edgefield
Phone: (803) 279-4138
Fax:
Key Contact: Yes

Mr. Tommy Paradise
Administrator
215 Jeter Street
Edgefield, SC 29824
Edgefield County
Airport: EDGEFIELD COUNTY
Email:
County: Edgefield
Phone: (803) 637-4000
Fax: (803) 637-4056
Key Contact: No

Key Contacts For - FAIRFIELD COUNTY

Mr. Steven Gaither
Grants Coordinator
P.O. Drawer 60
Winnsboro, SC 29180
Fairfield County
Airport: FAIRFIELD COUNTY
Email: Steven.Gaither@fairfield.sc.gov
County: Fairfield
Phone: (803) 815-4044
Fax: (803) 635-5969
Key Contact: No

Mr. Brian Steed
FBO
1291 Runway Rd.
Winnsboro, SC 29180
S&S Aviation
Airport: FAIRFIELD COUNTY
Email: brian@ssaviation-sc.com
County: Fairfield
Phone: (803) 635-3086 Alt: (803) 327-3214
Fax: (803) 635-1058
Key Contact: Yes

Mr. Harold Ross
Chairman
226 Kenal Rd.
Ridgeway, SC 29130
Fairfield County Airport Commission
Airport: FAIRFIELD COUNTY
Email: haroldross@truvista.net
County: Fairfield
Phone: 803-462-3051 Alt: 803-337-8887
Fax:
Key Contact: Yes

Mr. Jason Taylor
County Administrator
P.O. Drawer 60
Winnsboro, SC 29180
Fairfield County
Airport: FAIRFIELD COUNTY
Email:
County: Fairfield
Phone: (803) 712-6502
Fax:
Key Contact: Yes

Key Contacts For - FAIRVIEW

Mr Greg Hall
Airport Owner
PO Box 1086
Greer, SC 29652
Fairview Airport
Airport: FAIRVIEW
Email: greg.hall@century3inc.com
County: Spartanburg
Phone: (864) 420-1400
Fax:
Key Contact: No

Key Contacts For - FLORENCE RGNL

Mr. Connie Anderson
Airport Director
2100 Terminal Drive
Florence, SC 29506
Florence Regional Airport
Airport: FLORENCE RGNL
Email: canderson@flyflo.us
County: Florence
Phone: (843) 519-0552 Alt: (843) 632-0118
Fax: (843) 665-4751
Key Contact: No

Mr. Terrance Gibbs
Tenant
2100 Terminal Drive
Florence, SC 29506
Hertz Rental Car
Airport: FLORENCE RGNL
Email: Terrance_B_Gibbs/RAC/Hertz@Hertz.com
County: Florence
Phone: (843) 662-7930
Fax: (843) 662-7639
Key Contact: Yes

Ms. Renee Lunn
Station Manager
2100 Terminal Drive
Florence, SC 29506
American
Airport: FLORENCE RGNL
Email:
County: Florence
Phone: (843) 413-4607
Fax: (743) 413-4604
Key Contact: Yes

Mr. Aaron Wells
Tenant
2100 Terminal Drive
Florence, SC 29506
Avis Rental Car
Airport: FLORENCE RGNL
Email:
County: Florence
Phone: (843) 689-7695 Alt: (910) 540-9559
Fax: (910) 763-6858
Key Contact: Yes

Ms. Trudy Bellamy
Tenant
2100 Terminal Drive
Florence, SC 29506
Budget Rental Car
Airport: FLORENCE RGNL
Email:
County: Florence
Phone: (843) 667-1190
Fax: (843) 687-8625
Key Contact: Yes

Mr. Todd Gibson
FBO
500 S. McCall Blvd
Florence, SC 29506
Precision Air
Airport: FLORENCE RGNL
Email:
County: Florence
Phone: (843) 667-9627
Fax: (843) 667-9838
Key Contact: Yes

Ms. Sarah Maiden
Tenant
2100 Terminal Drive
Florence, SC 29506
Alamo/National Rental Car
Airport: FLORENCE RGNL
Email:
County: Florence
Phone: (843) 662-9077
Fax: (843) 665-6845
Key Contact: Yes

Key Contacts For - GEORGETOWN COUNTY

Mr. Barry Brock
FBO
129 Airport Road
Georgetown, SC 29440
Seven Rivers Aviation
Airport: GEORGETOWN COUNTY
Email: barryebrock@gmail.com
County: Georgetown
Phone: (843) 527-7516 Alt: (843) 240-4820
Fax: (843) 527-8017
Key Contact: Yes

Mr. Sel Hemingway
County Administrator
P.O. Drawer 421270
Georgetown, SC 29442-1270
Georgetown County
Airport: GEORGETOWN COUNTY
Email: gtcadmin@gtcounty.org
County: Georgetown
Phone: (843) 545-3006
Fax: (843) 545-3252
Key Contact: Yes

Mr. Rick Westfall
Airport Manager
129 Airport Road
Georgetown, SC 29440
Georgetown County Airport
Airport: GEORGETOWN COUNTY
Email: Rwestfall@gtcounty.org
County: Georgetown
Phone: (843) 545-3638 Alt: (843) 458-6745
Fax:
Key Contact: Yes

Mr Ray Funnye
Public Works Director
PO Drawer 421270
Georgetown, SC 29442
Georgetown County Public Services
Airport: GEORGETOWN COUNTY
Email: rcfunnye@gtcounty.org
County: Georgetown
Phone: (843) 545-3325
Fax: (843) 545-3326
Key Contact: No

Mr. Don Quattlebaum
Chairman
522 Rice Bluff Road
Pawleys Island, SC 29585
Georgetown County Airport Commission
Airport: GEORGETOWN COUNTY
Email: DAQ@sc.rr.com
County: Georgetown
Phone: (843) 237-9299 Alt: (843) 235-6697
Fax:
Key Contact: Yes

Key Contacts For - GREEN SEA

Mr. Earl Shaw
Owner
PO Box 123
Long, SC 29568
Green Sea Airport
Airport: GREEN SEA
Email:
County: Horry
Phone: (843) 907-8466 Alt: (843) 756-1497
Fax:
Key Contact: No

Mr. Hank Brown
FBO
PO Box 5791
Greenville, SC 29606
Greenville Jet Center
Airport: GREENVILLE DOWNTOWN
Email: hank@greenvillejetcenter.com
County: Greenville
Phone: (864) 232-7100
Fax: (864) 235-6384
Key Contact: Yes

Mr. Joseph Frasher
Airport Director
100 Tower Drive, Unit 2
Greenville, SC 29607
Greenville Downtown Airport Commission
Airport: GREENVILLE DOWNTOWN
Email: joe@greenvilledowntownairport.com
County: Greenville
Phone: (864) 242-4777 Alt: (864) 787-6781
Fax: (864) 242-4870
Key Contact: No

Mr. Eric Groves
Tenant
54 Watson Aviation Road
Greenville, SC 29607
Special Services Corp.
Airport: GREENVILLE DOWNTOWN
Email: egroves@specialservicescorp.com
County: Greenville
Phone: (864) 363-3044
Fax: (864) 242-9929
Key Contact: Yes

Ms. Cyndy Hollman
Owner
100 Tower Drive, Unit #8
Greenville, SC 29607
Flight School of Greenville
Airport: GREENVILLE DOWNTOWN
Email: inforflighschoolof greenville
County: Greenville
Phone: (864) 202-3342
Fax:
Key Contact: Yes

Mr. Douglas Duncan
Owner
2435 E. North #253
Greenville, SC 29615
Douglas Duncan Aviation
Airport: GREENVILLE DOWNTOWN
Email: dougduncanaviation@gmail.com
County: Greenville
Phone: (864) 350-0092
Fax:
Key Contact: Yes

Mr. Jonathan Giles
Chairman
P.O. Box 24220
Greenville, SC 29616
Greenville Downtown Airport Commission
Airport: GREENVILLE DOWNTOWN
Email: jgiles1207@aol.com
County: Greenville
Phone: (864) 322-0730 Alt: (864) 704-2078
Fax:
Key Contact: Yes

Mr. Ted Hanes
Tenant
65 Miler Lane
Greenville, SC 29607
Above and Beyond, Inc.
Airport: GREENVILLE DOWNTOWN
Email: aboveinc01@gmail.com
County: Greenville
Phone: (864) 282-2328
Fax:
Key Contact: Yes

Ms. Lara Kaufmann
Public Information Director
327 W. Prentiss Avenue
Greenville, SC 29605
Greenville Downtown Airport
Airport: GREENVILLE DOWNTOWN
Email: LaraLKaufmann@gmail.com
County: Greenville
Phone: (864) 270-6660
Fax: (864) 242-4870
Key Contact: Yes

Mr. David Knoblauch
Tenant
100 Tower Drive, Unit 12
Greenville, SC 29607
Venture Aviation Group, LLC
Airport: GREENVILLE DOWNTOWN
Email: david@venture-aviation.com
County: Greenville
Phone: (864) 370-2962 Alt: (864) 270-1032
Fax: (864) 370-2247
Key Contact: Yes

Mr. Sonny Massey
ATCT Manager
100 Tower Drive, Unit #3
Greenville, SC 29607
Greenville Downtown Airport
Airport: GREENVILLE DOWNTOWN
Email: gmutwr@greenvilledowntownairport.com
County: Greenville
Phone: (864) 271-2033
Fax: (864) 271-3634
Key Contact: Yes

Ms. Kim Sanders
Administrative Assistant
1317 Alexandrite Lane
Mauldin, SC 29662
Greenville Downtown Airport
Airport: GREENVILLE DOWNTOWN
Email: kim@greenvilledowntownairport.com
County: Greenville
Phone: (864) 242-4777 Alt: (864) 884-0690
Fax: (864) 242-4870
Key Contact: Yes

Mr. Mark Spang
Tenant
10 Opportunity Place
Greenville, SC 29607
USAerotech
Airport: GREENVILLE DOWNTOWN
Email: mspang@usaerotech.net
County: Greenville
Phone: (864) 987-9331
Fax: (864) 987-9332
Key Contact: Yes

Mr. John Long
Director of Maintenance
521 Beacon Shores Drive
Seneca, SC 29672
Greenville Downtown Airport
Airport: GREENVILLE DOWNTOWN
Email: john@greenvilledowntownairport.com
County: Greenville
Phone: (864) 787-6783
Fax: (864) 242-6074
Key Contact: Yes

Mr. Dimitri Patafyllas
Owner
100 Tower Drive, Unit #11
Greenville, SC 29607
Stratos Aviation Flight School
Airport: GREENVILLE DOWNTOWN
Email:
County: Greenville
Phone: (864) 272-6268
Fax:
Key Contact: Yes

Mr. Jason Shurbutt
Flight Instructor
65 Miler Lane
Greenville, SC 29607
Greenville Aviation Flight School
Airport: GREENVILLE DOWNTOWN
Email: jasonshurbutt@msn.com
County: Greenville
Phone: (864) 242-4201
Fax:
Key Contact: Yes

Mr. Mike Williams
Owner
65 Miler Lane
Greenville, SC 29607
Wings Over Greenville
Airport: GREENVILLE DOWNTOWN
Email: wingsovergreenville@gmail.com
County: Greenville
Phone: (864) 134-7800
Fax: (864) 282-1957
Key Contact: Yes

Tenant
P. O. Box 5303
Greenville, SC 29606
Civil Air Patrol
Airport: GREENVILLE SPARTANBURG INTL
Email:
County: Greenville
Phone: (864) 271-7726
Fax:
Key Contact: Yes

Ms. Malinda Anderson
Manager
P.O. Box 5033
Greenville, SC 29606
IH Services
Airport: GREENVILLE SPARTANBURG INTL
Email:
County: Spartanburg
Phone: (864) 297-3748
Fax: (864) 297-9219
Key Contact: Yes

Mr. Prince Brock
Manager
1900 GSP Drive, Suite 29
Greer, SC 29651
US Postal Service
Airport: GREENVILLE SPARTANBURG INTL
Email:
County: Spartanburg
Phone: (864) 289-9575
Fax: (864) 848-9887
Key Contact: Yes

Mr David Edwards
Deputy County Administrator
2000 GSP Drive, Suite 1
Greer, SC 29651
Greenville Spartanburg Airport Commission
Airport: GREENVILLE SPARTANBURG INTL
Email: dedwards@gspairport.com
County: Spartanburg
Phone: (864) 848-6260
Fax: (864) 848-6225
Key Contact: No

Manager
3054 Gateway Drive
Greer, SC 29651
UPS
Airport: GREENVILLE SPARTANBURG INTL
Email:
County: Spartanburg
Phone: (864) 848-9760
Fax: (864) 848-9638
Key Contact: Yes

Mr. Charles Atchison
Tenant
P.O. Box 1728
Spartanburg, SC 29304
Atchison Transportation
Airport: GREENVILLE SPARTANBURG INTL
Email:
County: Spartanburg
Phone: (864) 595-1234
Fax: (864) 587-8072
Key Contact: Yes

Ms. Meme Combs
Manager
500 Aviation Drive, Suite 4
Greer, SC 29651
Delta Airlines
Airport: GREENVILLE SPARTANBURG INTL
Email:
County: Spartanburg
Phone: (864) 968-2386
Fax: (864) 968-2366
Key Contact: Yes

Mr. Nathan Garner
GIS Supervisor
2000 GSP Drive, Suite 1
Greer, SC 29651
Greenville-Spartanburg International Airport
Airport: GREENVILLE SPARTANBURG INTL
Email: ngarner@gspairport.com
County: Spartanburg
Phone: (864) 848-6219 Alt: (864) 884-3264
Fax: (864) 848-6225
Key Contact: Yes

Mr. John Harris
Manager
3080 Gateway Drive
Greer, SC 29651
Federal Express
Airport: GREENVILLE SPARTANBURG INTL
Email:
County: Spartanburg
Phone: (864) 968-2700
Fax: (864) 968-2893
Key Contact: Yes

Mr. Kevin Howell
Vice President, Operations
200 GSP Drive, Suite 1
Greer, SC 29651
Greenville-Spartanburg Airport District
Airport: GREENVILLE SPARTANBURG INTL
Email: khowell@gspairport.com
County: Spartanburg
Phone: (864) 848-6269
Fax:
Key Contact: Yes

Mr. Chris Langston
Manager
500 Aviation Drive, Suite 17
Greer, SC 29651
Windows Restaurant
Airport: GREENVILLE SPARTANBURG INTL
Email:
County: Spartanburg
Phone: (864) 877-7417
Fax: (864) 801-4896
Key Contact: Yes

Mr. Richard Phillips
Manager
200 GSP Drive, Suite 5
Greer, SC 92651
Federal Aviation Administration
Airport: GREENVILLE SPARTANBURG INTL
Email: richard.e.phillips@faa.gov
County: Spartanburg
Phone: (864) 879-2155 Alt: (864) 879-2156
Fax: (864) 877-6017
Key Contact: Yes

Mr. Danny Harrison
Manager
161 Industrial Park Road
Greer, SC 29651
National Car Rental
Airport: GREENVILLE SPARTANBURG INTL
Email:
County: Spartanburg
Phone: (864) 877-6446
Fax: (864) 877-6300
Key Contact: Yes

Ms. Vicki Lanford
Manager
150 W. Phillips Road
Greer, SC 29650
US Customs
Airport: GREENVILLE SPARTANBURG INTL
Email:
County: Spartanburg
Phone: (864) 877-8006
Fax: (864) 848-3454
Key Contact: Yes

Mr. Mark Marett
Manager
121 Industrial Park Road
Greer, SC 29651
Hertz Corporation
Airport: GREENVILLE SPARTANBURG INTL
Email:
County: Spartanburg
Phone: (864) 877-4261
Fax: (864) 877-8320
Key Contact: Yes

Mr. Jeff Schoepfel
Manager
191 Industrial Road
Greer, SC 29651
Thrifty Car Rental/Dollar Car Rental
Airport: GREENVILLE SPARTANBURG INTL
Email:
County: Spartanburg
Phone: (864) 877-7799
Fax: (864) 877-0370
Key Contact: Yes

Ms. Brenda Sigmom
Manager
500 Aviation Drive, Suite 21
Greer, SC 29651
United Express
Airport: GREENVILLE SPARTANBURG INTL
Email:
County: Spartanburg
Phone: (864) 848-6027
Fax: (864) 848-6311
Key Contact: Yes

Mr. Kenneth Streetman
Manager
141 Industrial Park Road
Greer, SC 29651
Avis Rent-A-Car
Airport: GREENVILLE SPARTANBURG INTL
Email:
County: Spartanburg
Phone: (864) 848-0069
Fax: (864) 848-1957
Key Contact: Yes

Mr. Mike Tarman
Manager
181-C Johns Road
Greer, SC 29650
Transportation Security Administration
Airport: GREENVILLE SPARTANBURG INTL
Email:
County: Spartanburg
Phone: (864) 968-0764
Fax: (864) 968-8156
Key Contact: Yes

Mr. Tom Watson
Public Safety Director
2000 GSP Drive, Suite 1
Greer, SC 29651
Greenville-Spartanburg Airport
Airport: GREENVILLE SPARTANBURG INTL
Email: chiefwatson@gspairport.com
County: Spartanburg
Phone: (864) 848-6266
Fax: (864) 848-6211
Key Contact: Yes

Mr. Alan Sistare
Public Safety Director
2000 GSP Drive, Suite 1
Greer, SC 29651
Greenville-Spartanburg Airport
Airport: GREENVILLE SPARTANBURG INTL
Email: asistare@gspairport.com
County: Spartanburg
Phone: (864) 848-6265
Fax: (864) 848-6259
Key Contact: Yes

Mr. Mark Streetman
Manager
181 Industrial Park Road
Greer, SC 29651
Budget Rent-A-Car
Airport: GREENVILLE SPARTANBURG INTL
Email:
County: Spartanburg
Phone: (864) 879-2134
Fax: (864) 879-8883
Key Contact: Yes

Ms. Venus Turner
Manager
500 Aviation Drive, Suite 18
Greer, SC 29651
Hudson News
Airport: GREENVILLE SPARTANBURG INTL
Email:
County: Spartanburg
Phone: (864) 989-0992
Fax: (864) 989-0993
Key Contact: Yes

Ms. Rosylin Weston
Public Information Director
2000 GSP Drive, Suite 1
Greer, SC 29651
Greenville-Spartanburg International Airport
Airport: GREENVILLE SPARTANBURG INTL
Email: rweston@gspairport.com
County: Spartanburg
Phone: (864) 848-6262
Fax: (864) 848-6225
Key Contact: Yes

Key Contacts For - GREENVILLE SPARTANBURG INTL

Mr. Dowe Winchell
Manager
500 Aviation Drive
Greer, SC 29651
Parking Garage Exit Toll Booth
Airport: GREENVILLE SPARTANBURG INTL
Email:
County: Spartanburg
Phone: (864) 877-9517
Fax: (864) 877-4202
Key Contact: Yes

Mr. Michael Wood
Manager
500 Aviation Drive, Suite 7
Greer, SC 29651
American
Airport: GREENVILLE SPARTANBURG INTL
Email:
County: Spartanburg
Phone: (864) 801-4714
Fax: (864) 801-4717
Key Contact: Yes

Key Contacts For - GREENWOOD COUNTY

Ms. Rossie Corwon
Engineer
County Courthouse
Greenwood, SC 29646-2691
Greenwood County
Airport: GREENWOOD COUNTY
Email: rcorwon@greenwoodsc.gov
County: Greenwood
Phone: (864) 942-8556
Fax: (864) 942-8580
Key Contact: No

Mr. Richard Trammell
FBO
322 Terminal Road
Greenwood, SC 29649
Aeronautical Service of Greenwood
Airport: GREENWOOD COUNTY
Email: trammellrichard@yahoo.com
County: Greenwood
Phone: (864) 942-9634
Fax: (864) 943-1518
Key Contact: Yes

Key Contacts For - HAMPTON-VARNVILLE

Ms. Rose Elliott
Administrator
200 Jackson Avenue East
Hampton, SC 29924
Hampton County
Airport: HAMPTON-VARNVILLE
Email: rdelliott@hamptoncountysc.org
County: Hampton
Phone: (803) 914-2100 Alt: (803) 943-8051
Fax:
Key Contact: No

Mr. Lee Ellis
Chairman
202 Joey Street
Hampton, SC 29924
Hampton-Varnville Airport Commission
Airport: HAMPTON-VARNVILLE
Email: lellis@ellisagency.com
County: Hampton
Phone: (803) 943-2911 Alt: (803) 943-2433
Fax: (803) 945-3777
Key Contact: Yes

Mr. Wayne Evans
Administrative Assistant
200 Jackson Ave East
Hampton, SC 29924
Hampton County Government
Airport: HAMPTON-VARNVILLE
Email: wevans@hamptoncountysc.org
County: Hampton
Phone: (803) 914-2100
Fax: (803) 914-2107
Key Contact: Yes

Mr. Jack Woodward
Commissioner
PO.Box 74
Varnville, SC 29944
Hampton-Varnville Airport Commission
Airport: HAMPTON-VARNVILLE
Email: jhwoodward@comcast.net
County: Hampton
Phone: (803) 943-4175 Alt: (803) 671-0006
Fax:
Key Contact: Yes

Key Contacts For - HARTSVILLE RGNL

Mr. Lee Gardner
Chairman

, SC
Hartsville Municipal Airport Advisory Committee
Airport: HARTSVILLE RGNL
Email: hleeg1@aol.com
County: Darlington
Phone: (843) 339-8375
Fax:
Key Contact: No

Mr. Hemming Hemmingsen
FBO
1083 Hartsville Airport Road
Hartsville, SC 29550
Hartsville Aviaiton Group
Airport: HARTSVILLE RGNL
Email: info@haviation.net
County: Darlington
Phone: (843) 383-1088 Alt: (843) 861-8887
Fax:
Key Contact: Yes

Mr. Graig Goodman
Airport Manager
133 W Carolina Avenue
Hartsville, SC 29551-2497
City of Hartsville
Airport: HARTSVILLE RGNL
Email: craig.goodman@hartsvillesc.gov
County: Darlington
Phone: (843) 339-2878 Alt: (843) 206-2353
Fax:
Key Contact: No

Mrs. Gina Tiller
Operations Manager
PO Drawer 2497
Hartsville, SC 29551
City of Hartsvile
Airport: HARTSVILLE RGNL
Email: gina.tiller@hartsvillesc.gov
County: Darlington
Phone: (843) 383-3015 Alt: (843) 861-7443
Fax: (843) 339-2869
Key Contact: Yes

Key Contacts For - HILTON HEAD

Mr. Darrin Boutot
Manager
120 Beach City Road
Hilton Head, SC 29925
Thrifty
Airport: HILTON HEAD
Email: www.thriftysc.com
County: Beaufort
Phone: (843) 689-9990
Fax: (843) 681-5980
Key Contact: Yes

Mr. Bill Buret
Air Traffic Control Manager

, SC

Airport: HILTON HEAD
Email:
County: Beaufort
Phone: (843) 342-4940
Fax:
Key Contact: Yes

Ms. Neri Diaz
Manager
120 Beach City Road
Hilton Head, SC 29925
National/Alamo
Airport: HILTON HEAD
Email: www.nationalcar.com
County: Beaufort
Phone: (843) 681-7368
Fax: (912) 964-0795
Key Contact: Yes

Mr. Mike Peery
FBO
52 Gateway Circle
Hilton Head, SC 29925
Signature Flight Support
Airport: HILTON HEAD
Email: michael.peery@signatureflight.com
County: Beaufort
Phone: (843) 689-3200
Fax: (843) 681-3960
Key Contact: Yes

Mr. Pete Buchanan
Chairman

, SC
Beaufort County Airport Advsor Board
Airport: HILTON HEAD
Email:
County: Beaufort
Phone:
Fax:
Key Contact: Yes

Ms. Karen Cribbs
Manager
120 Beach City Road
Hilton Head, SC 29925
Avis
Airport: HILTON HEAD
Email: www.avis.com
County: Beaufort
Phone: (843) 681-4126
Fax: (843) 681-9576
Key Contact: Yes

Mr. Ron Passaro
Manager
120 Beach City Road
Hilton Head, SC 29925
Hertz
Airport: HILTON HEAD
Email: www.hertz.com
County: Beaufort
Phone: (843) 681-7604 Alt: (843) 689-5875
Fax: (912) 964-4995
Key Contact: Yes

Mr. Jon Rembold
Airport Director
120 Beach City Road
Hilton Head, SC 29925
Beaufort County
Airport: HILTON HEAD
Email: jrembold@bcgov.net
County: Beaufort
Phone: (843) 255-2955
Fax: 843-255-9424
Key Contact: No

Key Contacts For - HILTON HEAD

Mr. Ralph Schey
Owner
71 Summit Dr.
Hilton Head, SC 29926
Exec. Air Maintenance
Airport: HILTON HEAD
Email:
County: Beaufort
Phone: (843) 298-5200 Alt: (843) 681-4705
Fax:
Key Contact: Yes

Mr. Larry Yeager
Fire Chief
120 Beach City Road
Hilton Head, SC 29925
Hilton Head Airport
Airport: HILTON HEAD
Email: lyeager@bcgov.net
County: Beaufort
Phone: (843) 255-2960 Alt: (843) 301-2492
Fax:
Key Contact: Yes

Mr. Darriel Williams
Manager
120 Beach City Road
Hilton Head, SC 29925
Budget Rental Car
Airport: HILTON HEAD
Email: www.drivebudget.com
County: Beaufort
Phone: (843) 689-3737
Fax: (843) 681-9035
Key Contact: Yes

Key Contacts For - HOLLY HILL

Mr. Lamar Day
Manager
9182 Old State Road
Holly Hill, SC 29059

Airport: HOLLY HILL
Email: gayleaustin@earthlink.net (town clerk for Lamar Day)
County: Orangeburg
Phone: (803) 496-7892 Alt: (803) 378-5239
Fax:
Key Contact: No

Mr. Larry Gardner
Chairman
2208 Unity Road
Holly Hill, SC 29059
Holly Hill Airport Commission
Airport: HOLLY HILL
Email: lgardn29059@embarqmail.com
County: Orangeburg
Phone: (803) 496-3947
Fax:
Key Contact: Yes

Key Contacts For - HUGGINS MEMORIAL

Ms. Bettie Huggins
Owner
768 East Smith Street
Timmonsville, SC 29161
Huggins Airport
Airport: HUGGINS MEMORIAL
Email:
County: Florence
Phone: (843) 346-3734
Fax:
Key Contact: No

FBO

, SC
Eagle Aviation
Airport: JIM HAMILTON L B OWENS
Email:
County: Richland
Phone: (803) 771-7915
Fax: (803) 256-9425
Key Contact: Yes

Mr. Christopher Eversmann
Manager
1400 Jim Hamilton Boulevard
Columbia, SC 29205
Jim Hamilton/L. B. Owens Airport
Airport: JIM HAMILTON L B OWENS
Email: eversmannc@rcgov.us
County: Richland
Phone: (803) 767-1789
Fax:
Key Contact: No

Mr. Stuart Hope
Commissioner
180 Wateree Avenue
Columbia, SC 29205
Richland County Airport Commission
Airport: JIM HAMILTON L B OWENS
Email: shope@hopeaviation.com
County: Richland
Phone: (803) 771-7766
Fax:
Key Contact: Yes

Mr. Frank Schumpert
Director of Maintenance
1400 Jim Hamilton Blvd Bldg E
Columbia, SC 29205
Aircraft Maintenance Services
Airport: JIM HAMILTON L B OWENS
Email: frank@amscolumbia.com
County: Richland
Phone: (803) 243-1157
Fax:
Key Contact: Yes

Mr. Paul Bass
Vice President, Operations
1400 Jim Hamilton Blvd.
Columbia, SC 29205
Eagle Aviation, Inc.
Airport: JIM HAMILTON L B OWENS
Email: pbass@eagleaviation.com
County: Richland
Phone: (803) 771-7915
Fax: (803) 256-9425
Key Contact: Yes

Mr. Jim Herpst
Chairman
1400 Jim Hamilton Blvd, Hangar 69
Columbia, SC 29205
EAA Chapter
Airport: JIM HAMILTON L B OWENS
Email: jimherpst@gmail.com
County: Richland
Phone: (803) 309-3130
Fax:
Key Contact: Yes

Mr. Don Purcell
Commissioner
216 Pebble Creek Rd.
Columbia, SC 29223
Richland County Airport Commission
Airport: JIM HAMILTON L B OWENS
Email: svagroup@aol.com
County: Richland
Phone: (803) 788-1707 Alt: (803) 261-9085
Fax:
Key Contact: Yes

Key Contacts For - KIRK AIR BASE

Mr. James Kirk
Owner
1007 Kirk Air Base Road
Lancaster, SC 29728
Kirk Air Base
Airport: KIRK AIR BASE
Email: kirkairbase@comporium.net
County: Lancaster
Phone: (803) 286-8800
Fax: (877) 422-9216
Key Contact: No

Key Contacts For - LAKE CITY MUNI CJ EVANS FIELD

Mr. Shawn Bell
City Manager
202 Kelley Street
Lake City, SC 29560
Town of Lake City
Airport: LAKE CITY MUNI CJ EVANS FIELD
Email:
County: Florence
Phone: (843) 374-5421 Alt: (843) 598-1448
Fax: (843) 374-1704
Key Contact: Yes

Mr. Dusan Fridl
Airport Manager
PO Box 1329
Lake City, SC 29560
Lake City Municipal/C.J. Evans Airport Commission
Airport: LAKE CITY MUNI CJ EVANS FIELD
Email: dusanfridl@hotmail.com
County: Florence
Phone: (843) 687-6490 Alt: (843) 374-5600
Fax:
Key Contact: No

FBO

, SC
Lancaster County Airport
Airport: LANCASTER COUNTY-MC WHIRTER FIELD
Email:
County: Lancaster
Phone: (803) 285-1513
Fax:
Key Contact: Yes

Mr. Doug Barnes
Chairman
286 Aviation Boulevard
Lancaster, SC 29721
Lancaster County Airport Commission
Airport: LANCASTER COUNTY-MC WHIRTER FIELD
Email: airport@lancastercountysc.net
County: Lancaster
Phone: (803) 285-9090
Fax:
Key Contact: No

Mr. Paul Moses
Manager
286 Aviation Blvd.
Lancaster, SC 29730
Lancaster County Airport
Airport: LANCASTER COUNTY-MC WHIRTER FIELD
Email: pmoses@lancastercountysc.net
County: Lancaster
Phone: (803) 285-1513
Fax: (803) 283-4787
Key Contact: Yes

Mr. Steve Willis
Administrator
PO Box 1809
Lancaster, SC 29721-1809
Lancaster County
Airport: LANCASTER COUNTY-MC WHIRTER FIELD
Email: swillis@lancastercountysc.net
County: Lancaster
Phone: (803) 416-9300
Fax: (803) 285-3361
Key Contact: Yes

FBO

, SC
Laurens County Airport
Airport: LAURENS COUNTY
Email:
County: Laurens
Phone: (864) 682-9620
Fax:
Key Contact: Yes

Mr. G. A. "Bud" Boyter
Airport Manager
3985 Torrington Road
Laurens, SC 29360-7747
Laurens County Airport
Airport: LAURENS COUNTY
Email: gaboyt@prtcnet.com
County: Laurens
Phone: (864) 923-9507 Alt: (864) 682-9620
Fax:
Key Contact: Yes

Mr. Jon Caime
Administrator
PO Box 445
Laurens, SC 29360
Laurens County
Airport: LAURENS COUNTY
Email: jcaime@co.laurens.sc.us
County: Laurens
Phone: (864) 984-5484
Fax: (864) 984-3726
Key Contact: Yes

Mr. George Wham
Chairman
606 South Adair Street
Clinton, SC 29325
Laurens County Airport Commission
Airport: LAURENS COUNTY
Email: gswham@prtcnet.com
County: Laurens
Phone: (864) 833-4304 Alt: (864) 981-1920
Fax:
Key Contact: No

Key Contacts For - LEE COUNTY-BUTTERS FIELD

Mr. Bobby Boland
County Administrator
P.O.Box 309
Bishopville, SC 29010
Lee County
Airport: LEE COUNTY-BUTTERS FIELD
Email:
County: Lee
Phone: (803) 484-5341
Fax: (803) 484-6512
Key Contact: Yes

Mr. George Roberts
Commissioner
412 Meadows Lane
Bishopville, SC 29010
Lee County Airport Commission
Airport: LEE COUNTY-BUTTERS FIELD
Email: mwatkins1@sc.rr.com
County: Lee
Phone: (803) 484-3296 Alt: (803) 229-2679
Fax: (803) 484-3296
Key Contact: No

Key Contacts For - LEXINGTON COUNTY AT PELION

Mr. Joseph Mergo III
County Administrator
212 S. Lake Dr.
Lexington, SC 29072
Lexington County
Airport: LEXINGTON COUNTY AT PELION
Email: jmergo@lex-co.com
County: Lexington
Phone: (803) 785-8100
Fax: (803) 785-8101
Key Contact: Yes

Mr. Michael Spires
Airport Manager
440 Ball Park Rd.
Lexington, SC 29072
Lexington County
Airport: LEXINGTON COUNTY AT PELION
Email: mspires@lex-co.com
County: Lexington
Phone: (803) 600-9242 Alt: (803) 785-8185
Fax: (803) 785-8593
Key Contact: No

Key Contacts For - LOWCOUNTRY RGNL

Mr. Chriswell Bickley
Administrative Assistant
PO Box 8
Walterboro, SC 29488
Walterboro-Colleton County Airport Commission
Airport: LOWCOUNTRY RGNL
Email: cbickley@lowcountry
County: Colleton
Phone: (843) 726-5536 Alt: (843) 909-0136
Fax: (843) 726-5165
Key Contact: Yes

Mr. John Hood
Tenant
457 Aviation Way
Walterboro, SC 29488
Lowcountry Aero Service, LLC
Airport: LOWCOUNTRY RGNL
Email: elizabeth_hood2000@Yahoo.com
County: Colleton
Phone: (843) 441-2361
Fax: (843) 549-1444
Key Contact: Yes

Mr. Bryon Miller
FBO
537 Aviation Way
Walterboro, SC 29488
Lowcountry Regional Airport
Airport: LOWCOUNTRY RGNL
Email:
County: Colleton
Phone: (843) 549-2549 Alt: (843) 538-2911
Fax: (843) 549-1444
Key Contact: Yes

Mr. Thomas Rowe
Airport Manager
PO Box 1234
Walterboro, SC 29488
Lowcountry Regional Airport
Airport: LOWCOUNTRY RGNL
Email: trowe@lowcountry.com
County: Colleton
Phone: (843) 893-7346 Alt: (843) 549-7575
Fax: (843) 549-1444
Key Contact: No

Key Contacts For - MARION COUNTY

FBO
225 Airport Circle
Mullins, SC 29574
Marion County
Airport: MARION COUNTY
Email:
County: Marion
Phone: (843) 423-8265
Fax:
Key Contact: Yes

Ms. Margaret Pittman
Airport Manager
225 Airport Court
Mullins, SC 29574
Marion County Airport
Airport: MARION COUNTY
Email: mpittman@marionsc.org
County: Marion
Phone: (843) 423-8265 Alt: (843) 526-1409
Fax: (843) 423-8266
Key Contact: No

Mr. Tim Harper
Administrator
PO Box 183
Marion, SC 29571
Marion County
Airport: MARION COUNTY
Email: tharper@marionsc.org
County: Marion
Phone: (843) 423-3904
Fax: (843) 423-8306
Key Contact: Yes

Key Contacts For - MARLBORO COUNTY JETPORT - H E AVENT FIELD

Mr. Barry Avent
Airport Manager
1231 State Road S-35-330
Bennettsville, SC 29512
Rare Air
Airport: MARLBORO COUNTY JETPORT - H E AVENT FIELD
Email: bavent325@aol.com
County: Marlboro
Phone: (843) 479-4797
Fax:
Key Contact: Yes

Mr. James Haynes
Administrator
POBox 419
Columbia, SC 29512
Marlboro County
Airport: MARLBORO COUNTY JETPORT - H E AVENT FIELD
Email:
County: Marlboro
Phone: (843) 479-5600
Fax: (843) 479-5639
Key Contact: Yes

Key Contacts For - MARLBORO COUNTY JETPORT - H.E. AVENT FIELD

FBO
1231 Airport Road
Bennettsville, SC 29512
Rare Air Inc.
Airport: MARLBORO COUNTY JETPORT - H.E. AVENT FIELD
Email:
County: Marlboro
Phone: (843) 479-2816
Fax:
Key Contact: Yes

Mr. Sidney Wallace
Public Works Director
PO Box 419
Marllboro, SC 29512-0419
Marlboro County Airport
Airport: MARLBORO COUNTY JETPORT - H.E. AVENT FIELD
Email:
County: Marlboro
Phone: (843) 479-1651
Fax: (843) 479-5639
Key Contact: Yes

Mr. Charles Midgley
Chairman
PO Box 494
Bennettsville, SC 29512
Marlboro County Airport Commission
Airport: MARLBORO COUNTY JETPORT - H.E. AVENT FIELD
Email: cmidgley@mecsc.net
County: Marlboro
Phone: (843) 479-6821
Fax: (843) 479-7898
Key Contact: Yes

Key Contacts For - MC CORMICK COUNTY

Mr. Columbus Stephens
County Administrator
610 S Mine Street
McCormick, SC 29835

Airport: MC CORMICK COUNTY
Email: cstephens@mccormickcountysc.org
County: McCormick
Phone: (864) 852-2231
Fax: (864) 852-2783
Key Contact: No

Key Contacts For - MT PLEASANT RGNL-FAISON FIELD

Mr. Paul Campbell
Airport Director
700 Airport Road
Mt. Pleasant, SC 29466
Charleston County Aviation Authority
Airport: MT PLEASANT RGNL-FAISON FIELD
Email: pcampbell@chs-airport.com
County: Charleston
Phone: (843) 761-7000
Fax:
Key Contact: No

Mr. Rick Parker
Flight Instructor
700 Faison Road
Mt. Pleasant, SC 29466
Coastal Aviation
Airport: MT PLEASANT RGNL-FAISON FIELD
Email: flycoastalaviation.com
County: Charleston
Phone: (843) 388-0535 Alt: (843) 991-3126
Fax:
Key Contact: Yes

Mr. Roger Schwartz
FBO
5500 International Blvd
Charleston, SC 29418
Charleston County Aviation Authority
Airport: MT PLEASANT RGNL-FAISON FIELD
Email:
County: Charleston
Phone: (843) 884-8837 Alt: (843) 761-7000
Fax:
Key Contact: Yes

Mr. Steve Massar
Tenant
700 Airport Drive
Mt. Pleasant, SC 29464
Aero East
Airport: MT PLEASANT RGNL-FAISON FIELD
Email:
County: Charleston
Phone: (843) 884-8837
Fax: (843) 856-4698
Key Contact: Yes

Mr. Bill Pearson
Tenant
700 Airport Rd.
Mt. Pleasant, SC 29466
Coastal Aviation
Airport: MT PLEASANT RGNL-FAISON FIELD
Email:
County: Charleston
Phone: (843) 388-0535
Fax:
Key Contact: Yes

Ms. Edna Young
Tenant
700 Faison Drive
Mt. Pleasant, SC 29465
Palmetto Air Service
Airport: MT PLEASANT RGNL-FAISON FIELD
Email: palmettoair.com
County: Charleston
Phone: (843) 884-8914
Fax:
Key Contact: Yes

Mr.
ATCT Manager

, SC
Myrtle Beach International
Airport: MYRTLE BEACH INTL
Email:
County: Horry
Phone: (803) 238-2994
Fax:
Key Contact: Yes

Mr. Charles Bree
Operations Manager
1100 Jetport Road
Myrtle Beach, SC 29577
Horry County Airport Advisory Commission
Airport: MYRTLE BEACH INTL
Email: breec@horrycounty.org
County: Horry
Phone: (843) 839-7343
Fax:
Key Contact: Yes

Mr. Jim Dittrich
Station Manager
1100 Jetport Road
Myrtle Beach, SC 29577
A/Delta/ComAir
Airport: MYRTLE BEACH INTL
Email: james.dittrich@delta.com
County: Horry
Phone: (843) 626-2338
Fax:
Key Contact: Yes

Mr Tim Jackson
FBO
1250 Airdrome Avenue
Myrtle Beach, SC 29577
Myrtle Beach Aviation
Airport: MYRTLE BEACH INTL
Email: jacksont@horrycounty.org
County: Horry
Phone: (843) 839-6745 Alt: (800) 474-5697
Fax: (843) 477-1769
Key Contact: Yes

Mr. Ryan Betcher
Economic Dev. Director
1100 Jetport Road
Myrtle Beach, SC 29577
Horry County Department of Airports
Airport: MYRTLE BEACH INTL
Email: betcherr@horrycounty.org
County: Horry
Phone: (843) 448-1580 Alt: (843) 685-3221
Fax: (843) 626-9096
Key Contact: Yes

Mr. Tom Charlson
Manager
1100 Jetport Road
Myrtle Beach,, SC 29577
TSA
Airport: MYRTLE BEACH INTL
Email: Thomas.Charlson@dhs.gov
County: Horry
Phone: (843) 626-4382
Fax:
Key Contact: Yes

Ms, Peg Jackson
Operations Manager
1038 Shine Avenue
Myrtle Beach, SC 29577
Pittsburgh Institute of Aeronautics
Airport: MYRTLE BEACH INTL
Email: pjackson@pia.edu
County: Horry
Phone: (843) 238-2700 Alt: (412) 215-6512
Fax:
Key Contact: Yes

Ms. Lisa Lassiter
Finance & Admin Manager
1100 Jetport Road
Myrtle Beach, SC 29577
Horry County Department of Airports
Airport: MYRTLE BEACH INTL
Email: lassiterl@horrycounty.org
County: Horry
Phone: (843) 839-7359
Fax:
Key Contact: Yes

Key Contacts For - MYRTLE BEACH INTL

Mr. Kirk Lovell
Assistant Director of Airports
1100 Jetport Road
Myrtle Beach, SC 29577
Horry County Department of Airports
Airport: MYRTLE BEACH INTL
Email: lovellk@horrycounty.org
County: Horry
Phone: (843) 448-1580
Fax: (843) 626-9096
Key Contact: Yes

Mr. Charles Sasser
Manager
1100 Jetport Road
Myrtle Beach,, SC 29577
US Customs
Airport: MYRTLE BEACH INTL
Email: cesasser@sccoast.net
County: Horry
Phone: (843) 916-0438
Fax:
Key Contact: Yes

Mr. Dennis Waynick
Maintenance Manager
1100 Jetport Road
Myrtle Beach, SC 29577
Horry County Department of Airports
Airport: MYRTLE BEACH INTL
Email: waynickd@horrycounty.org
County: Horry
Phone: (843) 839-6751
Fax: (843) 477-5657
Key Contact: Yes

Mr. Daniel Pruim
Engineer
1100 Jetport Road
Myrtle Beach, SC 29577
Horry County Department of Airports
Airport: MYRTLE BEACH INTL
Email: pruimd@horrycounty.org
County: Horry
Phone: (843) 839-7347 Alt: (843) 907-3907
Fax: (843) 626-9096
Key Contact: Yes

Mr. Scott VanMoppes
Interim Director
1100 Jetport Road
Myrtle Beach, SC 29577
Horry County Department of Airports
Airport: MYRTLE BEACH INTL
Email: svanmoppes@horrycounty.org
County: Horry
Phone: (843) 448-1580
Fax: (843) 626-9096
Key Contact: No

Key Contacts For - NEWBERRY COUNTY

Mr. Wayne Adams
Administrator
P.O. Box 156
Newberry, SC 29108
Newberry County
Airport: NEWBERRY COUNTY
Email: wadams@newberrycounty.net
County: Newberry
Phone: (803) 321-2100
Fax: (803) 321-2102
Key Contact: No

Mr. Bill Clamp
Maintenance Manager
1139 Airport Road
Newberry,, SC 29108
Clamp's Aero Services
Airport: NEWBERRY COUNTY
Email:
County: Newberry
Phone: (803) 321-9046
Fax:
Key Contact: Yes

Mr. Mike Pisano
Public Works Director
P.O. Box 156
Newberry, SC 29108
Newberry County
Airport: NEWBERRY COUNTY
Email: mpisano@newberrycounty.net
County: Newberry
Phone: (803) 321-2180 Alt: (803) 944-4298
Fax:
Key Contact: Yes

Mr. Milledge(Mickey) Wilson, Sr.
Chairman
3919 SC Hwy. 391
Prosperty, SC 29127
Newberry County Airport Commission
Airport: NEWBERRY COUNTY
Email: milledgewilsonsr@mindspring.com
County: Newberry
Phone: (803) 364-3792 Alt: (803) 629-8088
Fax:
Key Contact: Yes

Key Contacts For - NORTH MYRTLE BEACH

FBO

, SC
North Myrtle Beach Aviation
Airport: NORTH MYRTLE BEACH
Email:
County: Horry
Phone: (843) 848-7400
Fax:
Key Contact: Yes

Mr. Glenn Ray
Air Traffic Control Manager

, SC
RVA
Airport: NORTH MYRTLE BEACH
Email: rvacre@aol.com
County: Horry
Phone: (843) 272-3395
Fax:
Key Contact: Yes

Mr. Joe DeFeo
Maintenance Manager
3231 Victory Street, Hangar 328W
Myrtle Beach,, SC 29577
Beach Aircraft Maintenance
Airport: NORTH MYRTLE BEACH
Email: Beachaircraft@aol.com
County: Horry
Phone: (843) 222-5922
Fax:
Key Contact: Yes

Mr. Scott VanMoppes
Iterim Director
1100 Jetport Road
Myrtle Beach, SC 29577
Horry County Department of Airport
Airport: NORTH MYRTLE BEACH
Email: svanmoppes@horrycounty.org
County: Horry
Phone: (843) 448-1580
Fax: (843) 626-9096
Key Contact: No

Key Contacts For - OCONEE COUNTY RGNL

Mr. James Allison
Tenant
1101 Shoreview Drive
Seneca, SC 29678
Clemson University
Airport: OCONEE COUNTY RGNL
Email:
County: Oconee
Phone: (864) 650-6330
Fax:
Key Contact: Yes

Ms.. Melinda Cox
Operations Specialist
365 Airport Road
Seneca, SC 29678
Oconee County Airport
Airport: OCONEE COUNTY RGNL
Email: mcox@oconeesc.com
County: Oconee
Phone: (864) 882-2959
Fax:
Key Contact: Yes

Mr. Jeff Garrison
Airport Manager
365 AIRPORT RD.
Seneca, SC 29678
Oconee County Regional Airport
Airport: OCONEE COUNTY RGNL
Email: jgarrison@oconeesc.com
County: Oconee
Phone: (864) 882-2959
Fax:
Key Contact: No

Mr. Tom Luke
Chairman
106 Terry Drive
Seneca, SC 29678
Oconee County Airport Commission
Airport: OCONEE COUNTY RGNL
Email:
County: Oconee
Phone: (864) 882-4132
Fax:
Key Contact: Yes

Mr. Jim Anderson
Flight Instructor

,
Oconee County Regional Airport
Airport: OCONEE COUNTY RGNL
Email:
County: Oconee
Phone: (864) 940-5640
Fax:
Key Contact: Yes

Mr. Jeff Garrison
FBO
365 AIRPORT RD.
Seneca, SC 29678
Oconee County Aviation
Airport: OCONEE COUNTY RGNL
Email: jgarrison@oconeesc.com
County: Oconee
Phone: (864) 882-2959
Fax:
Key Contact: Yes

Mr. Jules Grosjean
Operations Supervisor
365 Airport Road
Seneca, SC 29678
Oconee County Regional Airport
Airport: OCONEE COUNTY RGNL
Email: jgrosjean@oconeesc.com
County: Oconee
Phone: (864) 882-2959
Fax: (864) 888-4803
Key Contact: Yes

FBO

, SC
Orangeburg Municipal Airport
Airport: ORANGEBURG MUNI
Email:
County: Orangeburg
Phone: (803) 534-5545
Fax: (803) 533-5928
Key Contact: Yes

Mr. Durwood Bowden
Public Works Director
Post Office Drawer 387
Orangeburg, SC 29116-0387
Department of Public Works, City of Orangeburg
Airport: ORANGEBURG MUNI
Email: dbowden@orangeburg.sc.us
County: Orangeburg
Phone: (803) 533-6010 Alt: (803) 535-0085
Fax: (803) 533-6051
Key Contact: No

Mr. Janson Finkbeiner
Maintenance Manager
1831 Airport Road
Orangeburg, SC 29115
South Carolina Avionics Services, LLC
Airport: ORANGEBURG MUNI
Email: info@scavionics.com
County: Orangeburg
Phone: (803) 586-1804
Fax: (803) 265-7831
Key Contact: Yes

Mr Ron Kohler
Airport Manager
1811 Airport Road
Orangeburg, SC 29115
Orangeburg Municipal Airport, City of Orangeburg
Airport: ORANGEBURG MUNI
Email: rkohler@orangeburg.sc.us
County: Orangeburg
Phone: (803) 534-5545 Alt: (803) 533-5882
Fax: (803) 533-5928
Key Contact: Yes

Mr. Kevin Bell
Commissioner
166 Raider Lane
St. Matthews, SC 29135
Orangeburg Municipal Airport Commission
Airport: ORANGEBURG MUNI
Email:
County: Orangeburg
Phone: (803) 536-4554 Alt: (803) 533-8164
Fax:
Key Contact: Yes

Mr. B. Reese Early
Commissioner
2590 Four Holes Road
Orangeburg, SC 29115
Orangeburg Municipal Airport Commission
Airport: ORANGEBURG MUNI
Email:
County: Orangeburg
Phone: (803) 534-6919
Fax:
Key Contact: Yes

Mr. A. Hutto, Jr.
Chairman
P.O. Box 2784
Orangeburg, SC 29118
Orangeburg Municipal Airport Commission
Airport: ORANGEBURG MUNI
Email:
County: Orangeburg
Phone: (803) 534-6621 Alt: (803) 378-0082
Fax:
Key Contact: Yes

Mr. John Yow
Administrator
P. O. Drawer 387
Orangeburg, SC 29115
City of Orangeburg
Airport: ORANGEBURG MUNI
Email: jyow@orangeburg.sc.us
County: Orangeburg
Phone: (803) 533-6000
Fax: (803) 533-6007
Key Contact: Yes

Key Contacts For - PAGELAND

Mr. Cecil Kimrey
Administrator
126 N. Pearl Street
Pageland, SC 29728
Town of Pageland
Airport: PAGELAND
Email: ckimrey@shtc.net
County: Chesterfield
Phone: (843) 672-7292 Alt: (843) 672-4417
Fax: (843) 672-5635
Key Contact: No

FBO

, SC
Pickens County Aviation
Airport: PICKENS COUNTY
Email:
County: Pickens
Phone: (864) 843-5803
Fax:
Key Contact: Yes

Mr. Ted Edwards
Manager
240 Airport Rd
Liberty, SC 29657

Airport: PICKENS COUNTY
Email: tedwards@co.pickens.sc.us
County: Pickens
Phone: (864) 843-5803
Fax:
Key Contact: Yes

Mr. Verone Peace
Chairman
240 Airport Road
Liberty, SC 29657
Pickens County Aeronautics Commission
Airport: PICKENS COUNTY
Email: n111vp@yahoo.com
County: Pickens
Phone: (864) 654-4870 Alt: (864) 430-9178
Fax: (864) 355-8081
Key Contact: No

Mr. Skeets Cooper
Airport Manager
240 Airport Road
Liberty, SC 29657
Pickens County Aiport
Airport: PICKENS COUNTY
Email: gmw7173@gmail.com
County: Pickens
Phone: (864) 843-5803 Alt: (864) 230-5799
Fax: (864) 843-5802
Key Contact: Yes

Mr Brian Fricks
Tenant
240 Airport Road
Liberty, SC
Performance Air, Inc.
Airport: PICKENS COUNTY
Email:
County: Pickens
Phone: (864) 449-4043
Fax:
Key Contact: Yes

Key Contacts For - RIDGELAND

Mr. Dennis Argetsinger
Maintenance Manager

Ridgeland, SC

Airport: RIDGELAND
Email:
County: Jasper
Phone: (843) 846-4349
Fax:
Key Contact: Yes

Mr. Andrew Fulghum
Administrator
PO Box 1149
Ridgeland, SC 29936
Jasper County
Airport: RIDGELAND
Email: afulghum@jaspercountysc.gov
County: Jasper
Phone: (843) 717-3690
Fax: (843) 726-7800
Key Contact: No

Mr. Gilford Rowland
Maintenance Manager
PO Box 1061
Ridgeland, SC 29936
Aircraft Constructor Inc.
Airport: RIDGELAND
Email: airconst@bellsouth.net
County: Jasper
Phone: (843) 717-2629 Alt: (912) 598-1215
Fax: (912) 598-4980
Key Contact: Yes

Mr. Claude Dean
Chairman
PO Box 653
Ridgeland, SC 29936
Jasper County Airport Commission
Airport: RIDGELAND
Email:
County: Jasper
Phone: (843) 726-7759 Alt: (843) 726-4906
Fax:
Key Contact: Yes

Mr. Ronnie Malphrus
Finance & Admin Manager
P. O. Box 1149
Ridgeland, SC 29936-1149
Ridgeland Airport/Japser County Deputy Administrator
Airport: RIDGELAND
Email: rmalphrus@jaspercountysc.gov
County: Jasper
Phone: (843) 726-7704 Alt: (843) 726-7637
Fax:
Key Contact: Yes

Key Contacts For - ROBERT F SWINNIE

Mr. Ray Funnye
Public Works Director
P.O. Drawer 421270
Georgetown, SC 29440
Georgetown County Public Services
Airport: ROBERT F SWINNIE
Email: rcfunnye@gtcounty.org
County: Georgetown
Phone: (843) 545-3325
Fax: (843) 545-3326
Key Contact: No

Mr. Rick Westfall
Airport Manager
129 Airport Road
Georgetown, SC 29440
Georgetown County Airport
Airport: ROBERT F SWINNIE
Email: rwestfall@gtcounty.org
County: Georgetown
Phone: (843) 545-3638
Fax:
Key Contact: Yes

Key Contacts For - ROCK HILL/YORK CO/BRYANT FIELD

Mr. David Carlan
Tenant
PO Box 37841
Rock Hill, SC 29732
Rock Hill Aviation
Airport: ROCK HILL/YORK CO/BRYANT FIELD
Email: dcarlan@flyuza.com
County: York
Phone: (803) 366-5111
Fax: (803) 366-5177
Key Contact: Yes

Mr. Mike Fitzgerald
FBO
550 Airport Road, Ste 109
Rock Hill, SC 29732
Skytech, Inc.
Airport: ROCK HILL/YORK CO/BRYANT FIELD
Email: Mfitzgerald@skytechinc.com
County: York
Phone: (803) 366-5108
Fax: (803) 980-7228
Key Contact: Yes

Mr. Steven Gould
Airport Manager
550 Airport Road
Rock Hill, SC 29732
Rock Hill-York County Airport Commission
Airport: ROCK HILL/YORK CO/BRYANT FIELD
Email: steven.gould@cityofrockhill.com
County: York
Phone: (803) 329-5560 Alt: (803) 417-3610
Fax: (803) 329-8765
Key Contact: No

Mr. Bill Grannis
Chairman
692 Goldflower Drive
Rock Hill, SC 29732
Rock Hill/York County Airpport Commission
Airport: ROCK HILL/YORK CO/BRYANT FIELD
Email: lostcomm7600@comporium.net
County: York
Phone: (803) 324-5169
Fax: (803) 325-8765
Key Contact: Yes

Mr. David Vehaun
City Manager
Post Office Box 11706
Rock Hill, SC 29731-1706
Rock Hill-York County Airport Commission/City of Rock Hill
Airport: ROCK HILL/YORK CO/BRYANT FIELD
Email: david.vehaun@cityofrockhill.com
County: York
Phone: (803) 327-7017
Fax: (803) 329-7007
Key Contact: Yes

Key Contacts For - SALUDA COUNTY

Mrs. Sandra Padget
Administrator
400 West Highland Avenue
Saluda, SC 29138
Saluda County
Airport: SALUDA COUNTY
Email: s.padget@saludacounty.sc.gov
County: Saluda
Phone: (864) 445-4500
Fax: (864) 445-9405
Key Contact: Yes

Ms. Jill Warren
Grants Coordinator
111 Law Enforcement Dr.
Saluda, SC 29138
Saluda County
Airport: SALUDA COUNTY
Email: j.warren@saludacounty.sc.gov
County: Saluda
Phone: (864) 445-2529 Alt: (803) 413-0270
Fax:
Key Contact: No

Key Contacts For - SANTEE COOPER RGNL

Mr. Thomas Harvin
Director of Properties

, SC
Clarendon County
Airport: SANTEE COOPER RGNL
Email:
County: Clarendon
Phone: (803) 433-3223 Alt: (803) 460-8877
Fax:
Key Contact: Yes

Mr. Jim Stoia
FBO
8604 Highway 260
Manning, SC 29102
Precision Air, Inc.
Airport: SANTEE COOPER RGNL
Email: preair@ftc-i.net
County: Clarendon
Phone: (803) 478-4764
Fax: (803) 478-4760
Key Contact: Yes

Mr. William Houser
Administrator
P.O. Box 486
Manning, SC 29102
Clarendon County
Airport: SANTEE COOPER RGNL
Email:
County: Clarendon
Phone: (803) 435-0135
Fax: (803) 435-2653
Key Contact: Yes

Ms. Vicky Williams
Grants Coordinator
PO Box 486
Manning, SC 29102
Clarendon County
Airport: SANTEE COOPER RGNL
Email: Grants@Clarendoncountygov.org
County: Clarendon
Phone: (803) 433-3229
Fax: (803) 435-2653
Key Contact: No

Mr. Gerald Adams
Tenant
P. O. Box 3492
Spartanburg, SC 29304-3492
Folly Aviation
Airport: SPARTANBURG DOWNTOWN MEMORIAL
Email:
County: Spartanburg
Phone: (864) 576-5766
Fax:
Key Contact: Yes

Mrs. Anna Kehidata
Administrative Assistant
500 Ammons Road
Spartanburg, SC 29306
Spartanburg Downtown Airport
Airport: SPARTANBURG DOWNTOWN MEMORIAL
Email: akehidata@cityofspartaburg.org
County: Spartanburg
Phone: (864) 574-8552 Alt: (864) 426-3615
Fax: (864) 574-8558
Key Contact: No

Mr. Larry King
Manager
129 Kensington Dr.
Spartanburg, SC 29306
Morgan Corporation
Airport: SPARTANBURG DOWNTOWN MEMORIAL
Email:
County: Spartanburg
Phone: (864) 595-0725
Fax:
Key Contact: Yes

Mr. Tom Marlowe
Tenant
366 N. Church St. P.O. Box 771
Spartanburg, SC 29304
SPA County Sheriffs Aviation Det.
Airport: SPARTANBURG DOWNTOWN MEMORIAL
Email:
County: Spartanburg
Phone: (864) 596-2075
Fax:
Key Contact: Yes

Mr. Bill Crews
Tenant
500 Ammons Rd
Spartanburg, SC 29306
Colburn Aircraft Sales
Airport: SPARTANBURG DOWNTOWN MEMORIAL
Email:
County: Spartanburg
Phone: (864) 574-5297
Fax:
Key Contact: Yes

Mr. Larry King
Tenant
129 Kensington Dr.
Spartanburg, SC 29306
Advance Amer.,Morgan Corp., ESA, OTO Dev.
Airport: SPARTANBURG DOWNTOWN MEMORIAL
Email:
County: Spartanburg
Phone: (864) 587-6748
Fax:
Key Contact: Yes

Mr. Rod Kovell
Manager
P.O. Box 3492
Spartanburg, SC 29304-3492
AGA, LLC
Airport: SPARTANBURG DOWNTOWN MEMORIAL
Email:
County: Spartanburg
Phone: (864) 363-6530
Fax:
Key Contact: Yes

Mr. Darwin Simpson
FBO
500 Ammons Road
Spartanburg, SC 29036
City of Spartanburg
Airport: SPARTANBURG DOWNTOWN MEMORIAL
Email: dsimpson@cityofspartanburg.org
County: Spartanburg
Phone: (864) 574-8552
Fax:
Key Contact: Yes

Key Contacts For - SPARTANBURG DOWNTOWN MEMORIAL

Mr. Darwin Simpson
Airport Manager
500 Ammons Road
Spartanburg, SC 29306
Spartanburg Downtown Airport
Airport: SPARTANBURG DOWNTOWN MEMORIAL
Email: dsimpson@cityofspartanburg.org
County: Spartanburg
Phone: (864) 574-8552 Alt: (864) 590-1874
Fax: (864) 574-8558
Key Contact: No

Mr. Johan Wilson
Tenant
500 Ammons Rd.
Spartanburg, SC 29306
Richard Crousse and Assoc.
Airport: SPARTANBURG DOWNTOWN MEMORIAL
Email:
County: Spartanburg
Phone: (864) 576-3262
Fax:
Key Contact: Yes

Ms. Billi Willauer
Tenant
500 Ammons Road
Spartanburg, SC 29306
Aero II, Inc.
Airport: SPARTANBURG DOWNTOWN MEMORIAL
Email:
County: Spartanburg
Phone: (864) 576-2376
Fax:
Key Contact: Yes

Key Contacts For - ST GEORGE

Mr. Don Hay
Airport Manager
PO Box 347
Harleyville, SC 29448
Dorchester County Airports
Airport: ST GEORGE
Email: don12hay@gmail.com
County: Dorchester
Phone: (843) 412-1999 Alt: (843) 462-7881
Fax: (843) 461-7500
Key Contact: No

Key Contacts For - SUMMERVILLE

Mr. Steven Barbieri
FBO
890 Grey Back Road
Summerville, SC 29484
Pelican Aviation, Inc.
Airport: SUMMERVILLE
Email: s.planedr@gmail.com
County: Dorchester
Phone: (843) 851-0970
Fax: (843) 851-0971
Key Contact: Yes

Mr. Jason Ward
Administrator
201 Johnson Street
St. George, SC 29477
Dorchester County
Airport: SUMMERVILLE
Email:
County: Dorchester
Phone: (843) 832-0100
Fax:
Key Contact: Yes

Mr. Don Hay
Airport Manager
PO Box 347
Harleyville, SC 29448
Dorchester County Airports
Airport: SUMMERVILLE
Email: don12hay@gmail.com
County: Dorchester
Phone: (843) 412-1999
Fax: (843) 462-7500
Key Contact: No

Mr. Jeremy Bauer
FBO
800 Windrow Drive
Sumter, SC 29150
On Eagles Wings
Airport: SUMTER
Email: oewings@ftc-i.net
County: Sumter
Phone: (803) 469-4639 Alt: (803) 905-2254
Fax: (803) 469-6276
Key Contact: Yes

Ms. Pamela Craven
Finance Director
13 East Canal Street
Sumter, SC 29150
Sumter County
Airport: SUMTER
Email:
County: Sumter
Phone: (803) 436-2333
Fax: (803) 436-2108
Key Contact: Yes

Mr. Ed Matter
Tenant
2955 Airport Road
Sumter, SC 29150
Pride Aviation
Airport: SUMTER
Email: prideaviation@earthlink.net
County: Sumter
Phone: (803) 469-8206
Fax: (803) 469-6261
Key Contact: Yes

Mr. Rocky Wall
Tenant
2950 Airport Road
Sumter, SC 29150
Red Baron Aviation
Airport: SUMTER
Email:
County: Sumter
Phone: (803) 469-2794
Fax:
Key Contact: Yes

Mr. Johnathan Bryan
Attorney
13 East Canal Street
Sumter, SC 29150
Sumter County
Airport: SUMTER
Email: jbryan@sumtercountysc.org
County: Sumter
Phone: (803) 774-3877
Fax: (803) 436-2108
Key Contact: No

Mr. Bill Lyman
Chairman
595 Sierra St.
Sumter, SC 29154
Sumter Municipal Airport Commission
Airport: SUMTER
Email: blyman@acmenet.net
County: Sumter
Phone: (803) 773-2131
Fax: (803) 773-2038
Key Contact: Yes

Mr. William Noonan
County Administrator
13 East Canal Street
Sumter, SC 29150-4925
Sumter County
Airport: SUMTER
Email:
County: Sumter
Phone: (803) 436-2102
Fax: (803) 436-2108
Key Contact: Yes

Ms Ginny Yonson
Grants Coordinator
13 East Canal Street
Sumter, SC 29150
Sumter County
Airport: SUMTER
Email:
County: Sumter
Phone: (803) 436-2404
Fax: (803) 436-2108
Key Contact: Yes

Key Contacts For - TWIN CITY

Mr.. Scott VanMoppes
Interim Director
1100 Jetport Road
Myrtle Beach, SC 29577
Horry County Department of Airports
Airport: TWIN CITY
Email: svanmoppes@horrycounty.org
County: Horry
Phone: (843) 448-1580
Fax: (843) 626-9096
Key Contact: No

Key Contacts For - TWIN LAKES

Mr. Bruce Douglas
Tenant
85 Rachel Ave.
Trenton, SC 29847
S17 Owners Association,Inc.
Airport: TWIN LAKES
Email:
County: Aiken
Phone: (803) 232-1220 Alt: (803) 640-6000
Fax:
Key Contact: Yes

Mr. Bernard Loyer
Manager
61 Rachel Avenue
Trenton, SC 29847

Airport: TWIN LAKES
Email: loyer836@aol.com
County: Aiken
Phone: (803) 480-9569
Fax:
Key Contact: No

Mr. John Shea
FBO
462 Cessna Drive
Trenton, SC 29847
Aero Aviation Maintenance
Airport: TWIN LAKES
Email:
County: Aiken
Phone: (803) 663-1777
Fax:
Key Contact: Yes

Mr. John Johnson
Airport Owner

, SC

Airport: TWIN LAKES
Email: john1@tds.net
County: Aiken
Phone: (803) 265-5100
Fax:
Key Contact: Yes

Mr. Dana Lynn
Tenant

Graniteville, SC
Star Light Sport Aircraft
Airport: TWIN LAKES
Email: Shop Number is 803-439-0006
County: Edgefield
Phone: (803) 295-3099 Alt: (803) 663-1052
Fax:
Key Contact: Yes

FBO

,
Union County Airport
Airport: UNION COUNTY, TROY SHELTON FIELD
Email:
County: Union
Phone: (864) 429-1680
Fax:
Key Contact: Yes

Mr. Ronnie Wade
Airport Manager
198 Airport Road
Union, SC 29379
Union County Airport
Airport: UNION COUNTY, TROY SHELTON FIELD
Email: rwade@countyofunion.com
County: Union
Phone: (864) 429-1680 Alt: (864) 426-3003
Fax: (864) 429-1681
Key Contact: No

Mr. Ed Greer
Chairman
611 Sardis Road
Union, SC 29379
Union County Airport Commission
Airport: UNION COUNTY, TROY SHELTON FIELD
Email:
County: Union
Phone: (864) 429-8800 Alt: (864) 427-2993
Fax:
Key Contact: Yes

Key Contacts For - WILLIAMSBURG REGIONAL

Mr. Richard Haddock
Airport Manager
85 Aviation Drive
Kingstree, SC 29556

Airport: WILLIAMSBURG REGIONAL
Email: haddockrb@ftc-i.net
County: Williamsburg
Phone: Alt: (843) 372-1119
Fax: (843) 374-1287
Key Contact: No

Mr. Stanley Pasley
County Administrator
PO Box 330, Sandy Bay Rd.
Kingstree, SC 29556
Williamsburg County
Airport: WILLIAMSBURG REGIONAL
Email:
County: Williamsburg
Phone: (843) 355-9321
Fax: (843) 355-2106
Key Contact: Yes

Key Contacts For - WILLIAMSBURG RGNL

Mr. Richard Haddock
Tenant
25 Ward Street
Kingstree, SC 29556

Airport: WILLIAMSBURG RGNL
Email: haddockrb@ftc-i.net
County: Williamsburg
Phone: (843) 372-1119 Alt: (843) 382-5800
Fax:
Key Contact: No

Mr Jack Whiteside
Airport Manager
PO Box 1125
Kingstree, SC 29556
Williamsburg Regional Airport
Airport: WILLIAMSBURG RGNL
Email:
County: Williamsburg
Phone: (843) 355-9321 Alt: (843) 373-0031
Fax: (843) 355-1585
Key Contact: Yes

FBO
2203 Airline Drive
Camden, SC 29020
Camden Jet Center
Airport: WOODWARD FIELD
Email:
County: Kershaw
Phone: (803) 432-3095 Alt: (803) 438-3876
Fax: (803) 432-1311
Key Contact: Yes

Mr. Billy Holden
Assistant Director of Airports
P. O. Box 2228
Camden, SC 29020
Kershaw County Airport Commission
Airport: WOODWARD FIELD
Email: bholden12@hotmail.com
County: Kershaw
Phone: (803) 432-7282 Alt: (803) 424-7068
Fax:
Key Contact: Yes

Mr. Frank Shumpert
Maintenance Manager
2003 Airline Dr.
Camden, SC 29020
Aircraft Maintenance, Inc.
Airport: WOODWARD FIELD
Email: franks@amscamden.com
County: Kershaw
Phone: (803) 713-0200
Fax: (803) 713-0017
Key Contact: Yes

Mr. Victor Carpenter
County Administrator
515 Walnut Street
Camden, SC 29020
Kershaw County
Airport: WOODWARD FIELD
Email: vic.carpenter@kershaw.sc.gov
County: Kershaw
Phone: (803) 425-1501
Fax: (803) 425-1546
Key Contact: Yes

Mr. Ron Prestage
Airport Manager
2203 Airline Drive
Camden, SC 29020
Woodward Field
Airport: WOODWARD FIELD
Email: ronp@prestagefarms.com
County: Kershaw
Phone: (803) 427-5992
Fax:
Key Contact: Yes

Mr. Jack West
Commissioner
1111 Broad Street
Camden, SC 29020
Kershaw County Airport Commission
Airport: WOODWARD FIELD
Email: westlawfirm@bellsouth.net
County: Kershaw
Phone: (803) 432-5106 Alt: (803) 427-3400
Fax: (803) 432-0550
Key Contact: No